Unit 1

Circuit Basics

KVL, KCL, Ohm's Law

LED Outputs

Buttons/Switch Inputs

VOLTAGE AND CURRENT

Current and Voltage

- Charge is measured in units of Coulombs
- Current – Amount of charge flowing through a specific point in a certain time period
  - Measured in Amperes (A) = Coulombs per second
  - Current is usually denoted by the variable, I
- Voltage – Electric potential energy
  - Analogous to mechanical potential energy (i.e. F = mgh)
  - Must measure across two points
  - Measured in Volts (V)
  - Common reference point: Ground (GND) = 0V
    - Often really connected to the ground

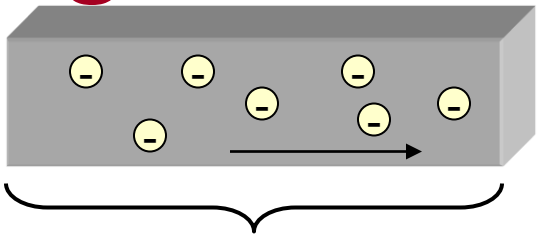

Conductive Material
(A Wire)

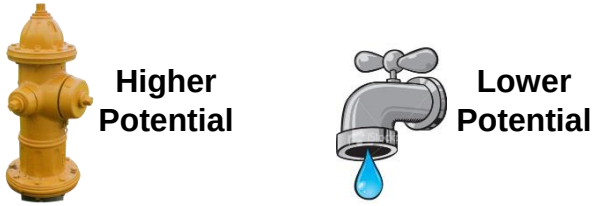

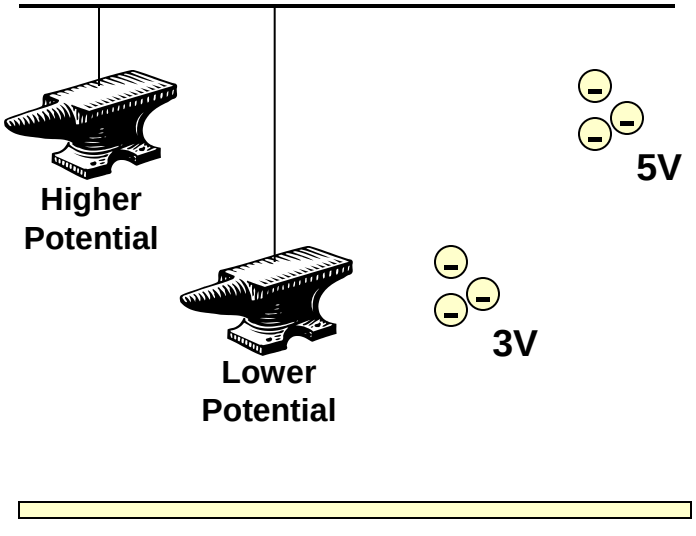

Current / Voltage Analogy

Charge =
Water

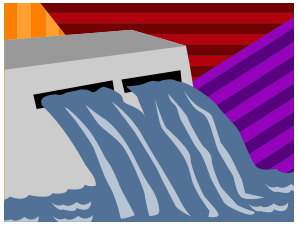

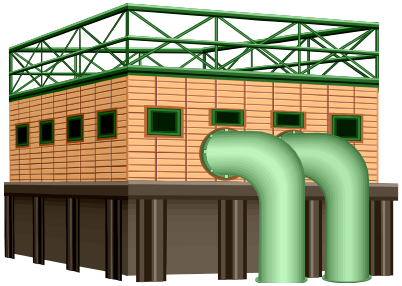

Voltage Source =
Water Pressure

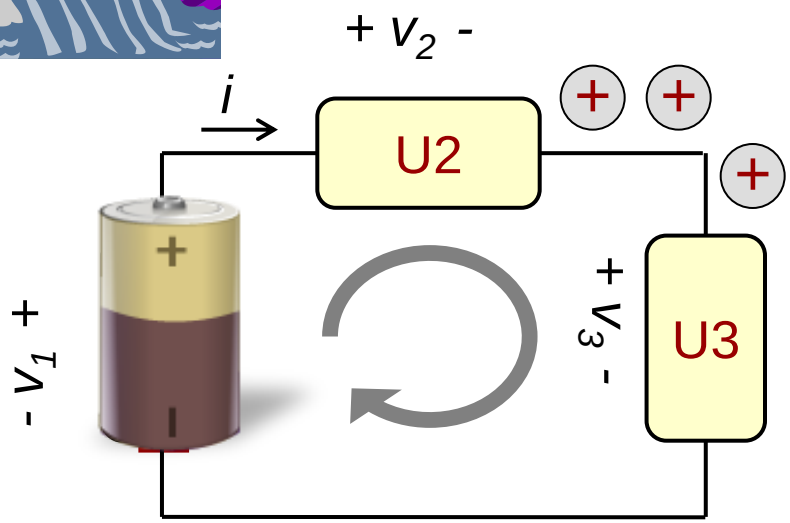

Meet The Components

- Most electronic circuits are modeled with the following components
- Resistor
  - Measures how well a material conducts electrons
- Capacitor & Inductor
  - Measures material's ability to store charge and energy
- Transistor
  - Basic amplification or switching technology

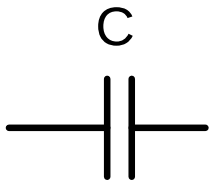

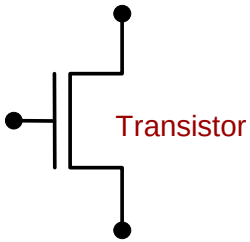

Kirchhoff's Laws

- Common sense rules that govern current and voltage
  - Kirchhoff's Current Law (KCL)
  - Kirchhoff's Voltage Law (KVL)
- Kirchhoff's Current Law (KCL)
  - The current flowing ***into*** a location (a.k.a. node) must equal the current flowing ***out*** of the location
  - …or put another way…
  - The sum of current at any location must equal 0

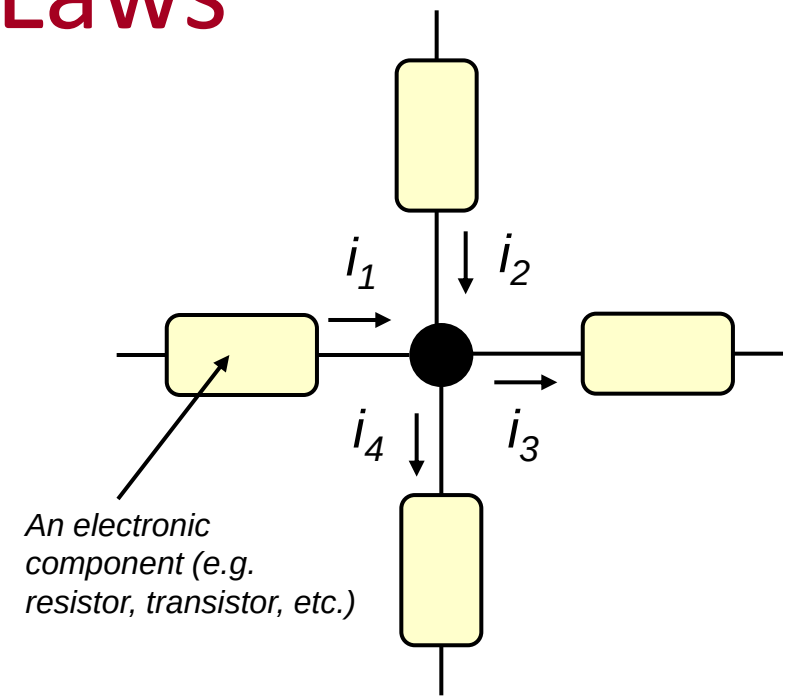

KCL says $i_1 + i_2 = i_3 + i_4$

Kirchhoff's Current Law

- Reminder: KCL says **current_in = current_out**
- Start by defining a direction for each current
  - It does not matter what direction we choose
  - When we solve for one of the currents we may get a "negative" current
  - "Negative" sign simply means the direction is opposite of our original indication
- In the examples to the right the top two examples the directions chosen are fine but physically in violation of KCL…
- …but KCL helps us arrive at a consistent result since solving for one of the current values indicates…
  - The magnitude of i1 and i2 are the same
  - They always flow in the opposite direction of each other (if one flows in the other flows out or vice versa)

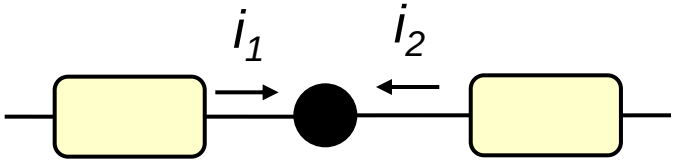

KCL says $i_1 + i_2 = 0$…implies $i_1 = -i_2$

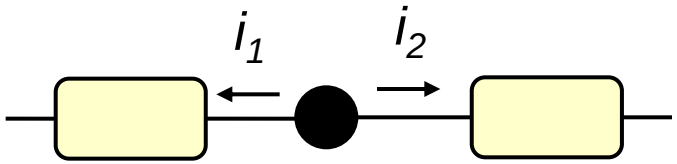

KCL says $0 = i_1 + i_2$ …implies $i_1 = -i_2$

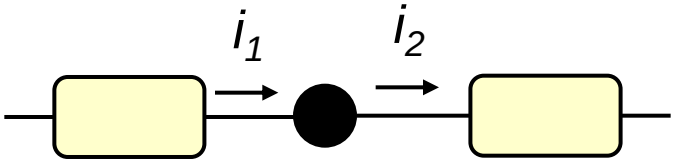

KCL says $i_1 = i_2$

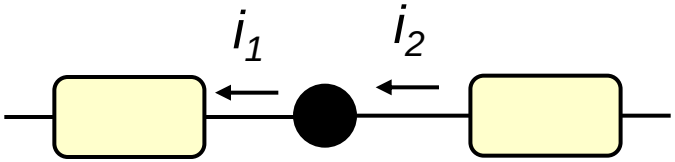

KCL says $i_2 = i_1$

Kirchhoff's Voltage Law

- Kirchhoff's Voltage Law (KVL)
  - The sum of voltages around a loop (i.e. walking around and returning to the same point) must equal 0
  - Define "polarity" of voltage and then be consistent as you go around the loop…obviously when you solve you may find a voltage to be negative which means you need to flip/reverse the polarity

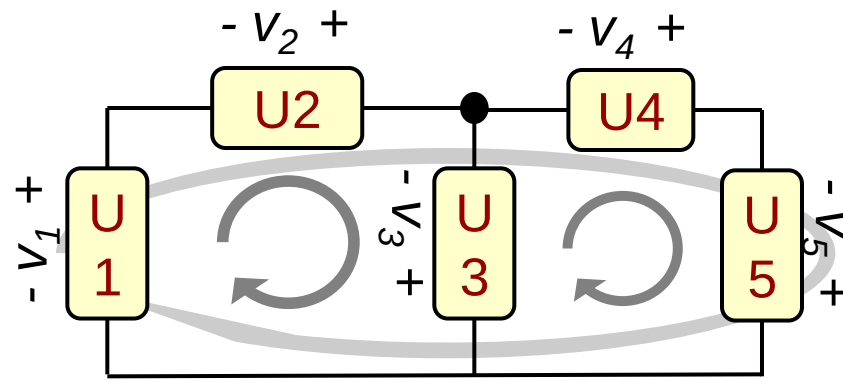

KVL says:

$v_1+v_2+v_3=0$

$v_1+v_2+v_4+v_5=0$

$-v_3+v_4+v_5=0$

KVL says:

$v_1-v_2-v_3=0$

$v_1=v_2+v_3$

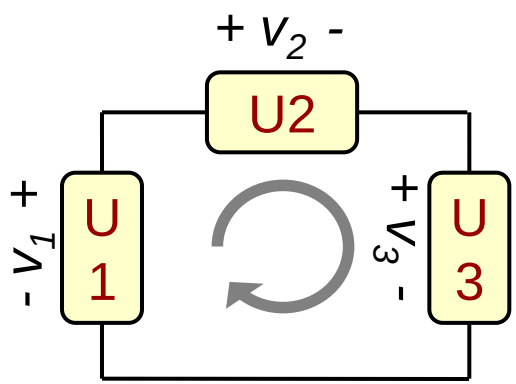

A Brief Summary

- KCL and KVL are **general** and **apply** no matter what kind of devices are used
  - The yellow boxes could be ANY electronic device: resistors, batteries, switches, transistors, etc…KVL and KCL will still apply
  - In a few minutes, we'll learn a law that only applies to resistors (or any device that can be modeled as a resistor)
- Some KVL or KCL equations may be redundant
  - Writing the equation for loop {v1,v2,v3} and {v3,v4,v5} may be sufficient and writing {v1,v2,v4,v5} may not be necessary
  - But as a novice, feel free to write them all

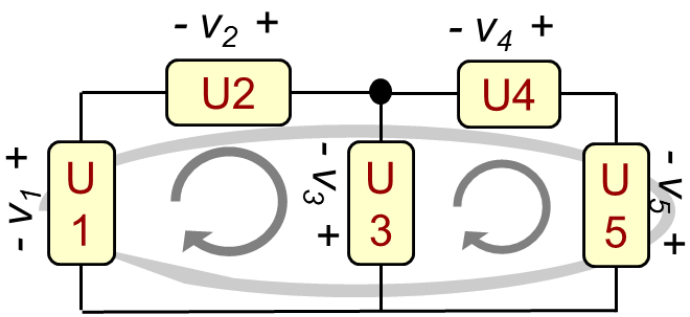

KVL says:

$v_1+v_2+v_3=0$

$v_1+v_2+v_4+v_5=0$

$-v_3+v_4+v_5=0$

Nodes

- ***(Def.)*** An **electric node** is the junction of two or more devices connected by wires
- Same voltage at any point of the node
- How many nodes exist in the diagram to the right?

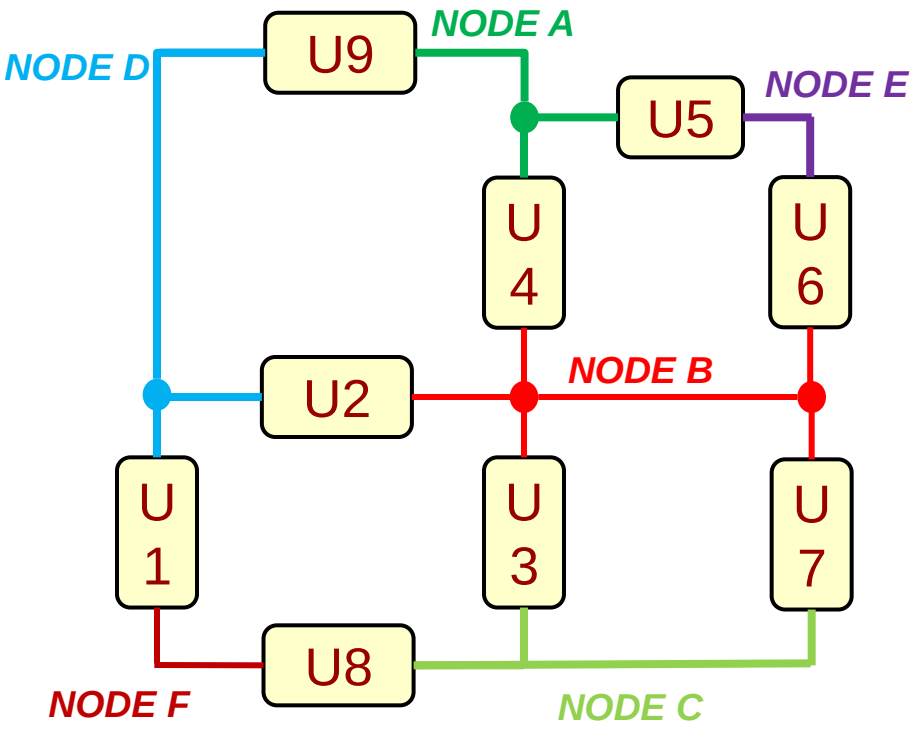

Practice KCL and KVL

Hint: Find a node or loop where there is only one unknown and that should cause a domino effect

- Use KCL to solve for i3, i4, and i6
  - Node A: i9 = i4 + 1A
    - 2 Unknowns…find another node
  - Node D: i9 = 1A+1A = 2A
  - Node A: 2A = i4 + 1A, thus i4=1A
  - Node C: 0.5A +i3 = i8
    - i8 must be 1A so i3 = 0.5A
  - Node B: i4 + i6 = 1A + i3 + 0.5A
    - i3 is 0.5A, i4 is 1A, and i6 has to be 1A
    - So check: 2A = 1A + 0.5A + 0.5A
- Use KVL to solve for v3, v8, v5
  - Loop {U3,U7}: -V3 + -5V = 0
    - V3 = -5V
  - Loop {U5,U6,U4}: -V5 - 3V + 4V = 0
    - V5 = 1V
  - Loop {U1,U2,U3,U8}:
    2V + 5V + (-5V) - v8 = 0
    - V8 = 2V

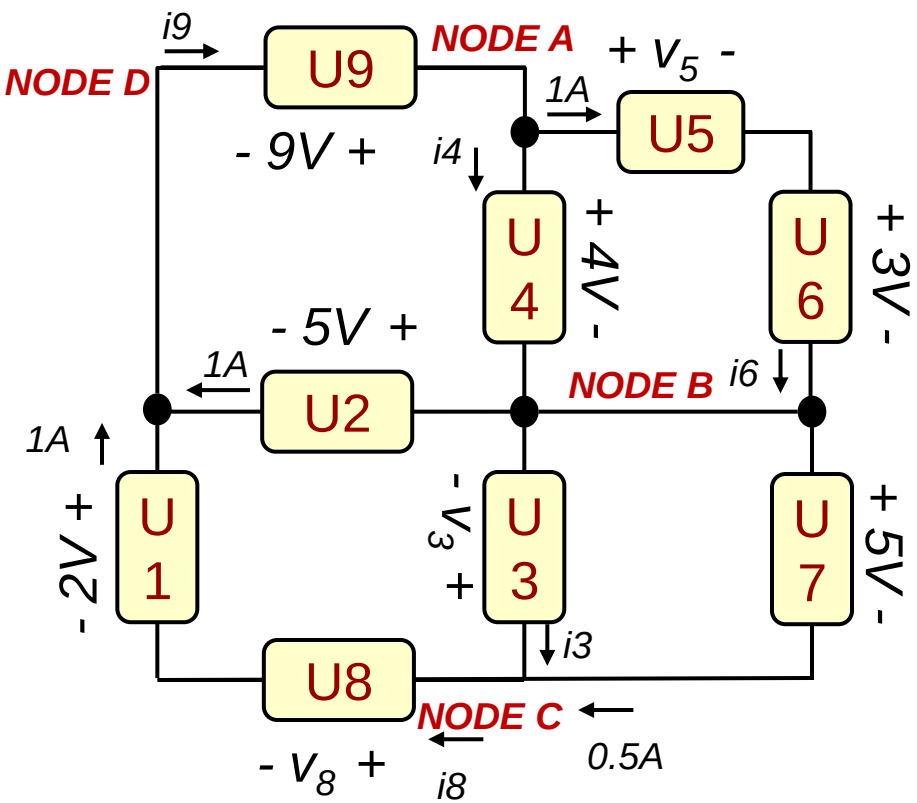

Resistance and Ohms Law

- Measure of how hard it is for current to flow through the substance
- Resistance = Voltage / Current
  - How much pressure do you have to put to get a certain current to flow
- Measured in Ohms (Ω)
- Ohm's Law
  - **I = V/R or V = IR**
  - R ↑ => I ↓

Large Resistance

Small Resistance

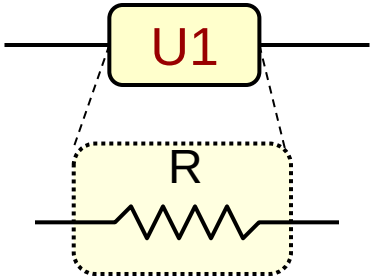

Schematic Symbol for a Resistor

Ohm's Law ONLY applies to resistors (or devices that can be modeled as a resistor such as switches and transistors)

http://usc.scout.com/2/926916.html
http://www.zimbio.com/photos/Marquise+Lee/Oregon+v+USC/9qQqBuy838Z

Series & Parallel Resistance

- Series resistors = same current must pass through both
- Parallel resistors = each connects to the same two nodes (same voltage different applied to both)
- Series and parallel resistors can be combined to an equivalent resistor with value given as shown…

Series Connections

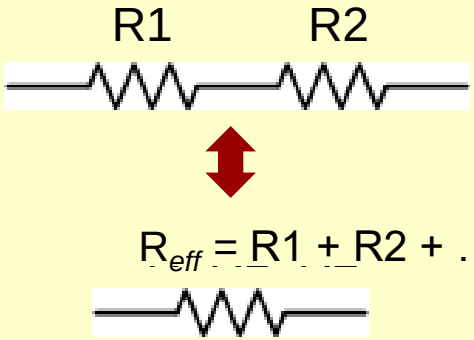

Parallel Connection

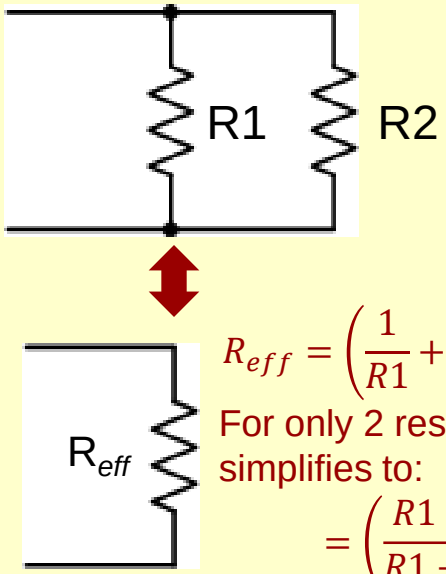

$$R_{eff} = \left(\frac{1}{R1} + \frac{1}{R2} + \cdots\right)^{-1}$$

For only 2 resistors, this simplifies to:

$$= \left(\frac{R1 \cdot R2}{R1 + R2}\right)$$

Solving Voltage & Current

- Given the circuit to the right, let…
  - Vdd = +5V, R1 = 400 ohms, R2 = 600 ohms
- Solve for the current through the circuit and voltages across each resistors (i.e. V1 and V2)
  - Since everything is in series, KCL teaches us that the current through each component must be the same, let's call it *i*
    - *i = Vdd / (R1 + R2) = 5/1000 = 5 mA*
  - This alone lets us compute V1 and V2 since Ohm's law says
    - V1 = i*R1 and V2 = i*R2
    - V1 = 2V and V2 = 3V
  - Though unneeded, KVL teaches us that
    - Vdd-V1-V2=0 or that Vdd = V1 + V2

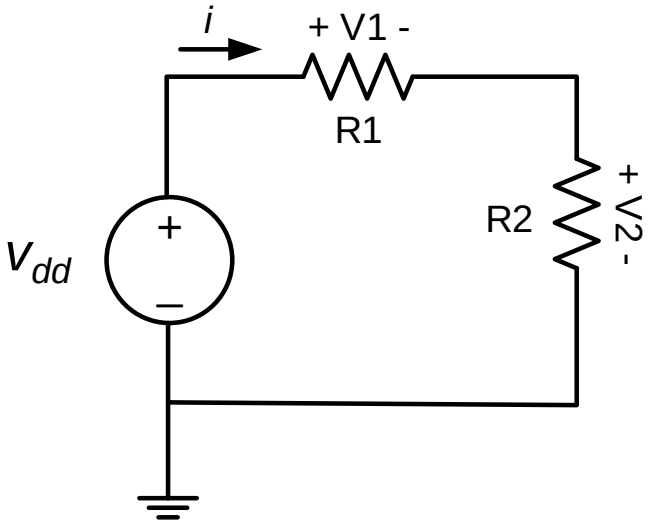

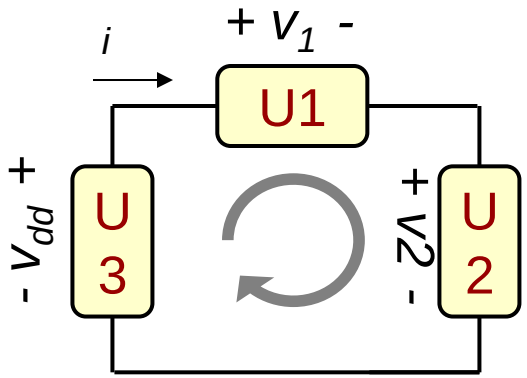

Voltage Supply Drawings

- The voltage source (Vdd) in the left diagram (i.e. the circle connected to the "Rest of Circuit") is shown in an alternate representation in the right diagram (i.e. the triangle labeled "Vdd")
- In the left diagram we can easily see a KVL loop available
- There is still a KVL loop available in the right diagram

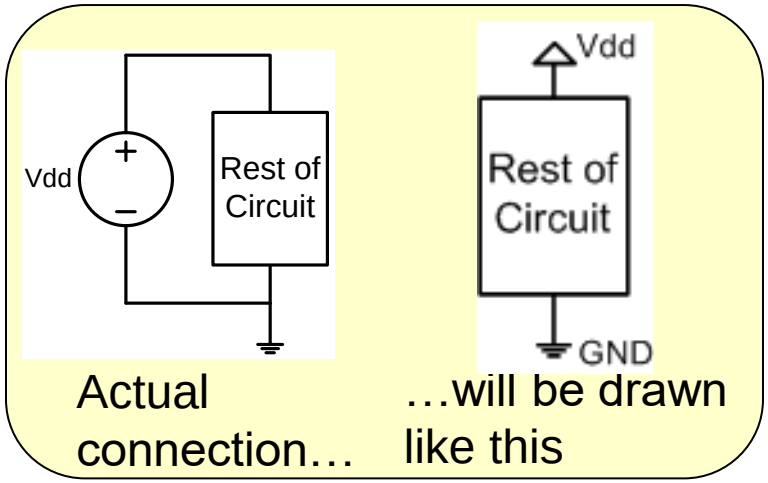

Tip: **Vdd** is the name of the source voltage used for digital '1' signals. GND (0V) is often used for digital '0' signals.

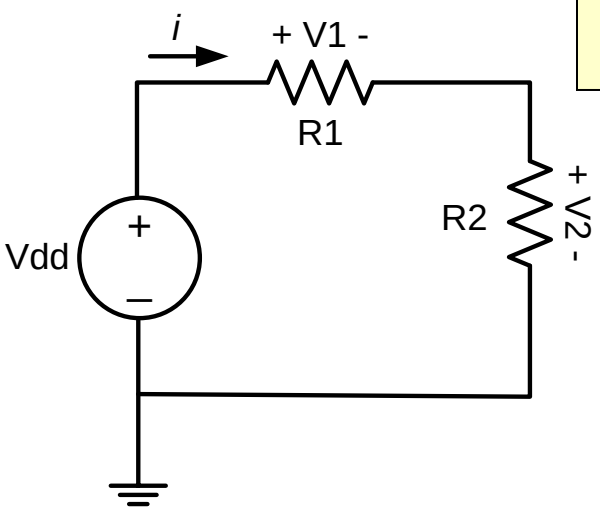

Both are drawings of the same circuit (i.e. they are equivalent)

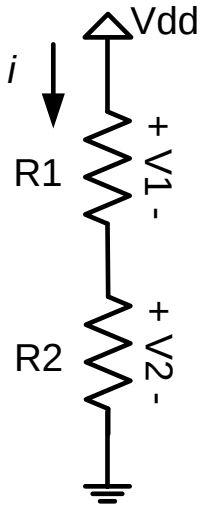

Shortcut: Voltage Dividers

- A shortcut application of KVL, KCL, and Ohm's law when two resistors are in series (**must be in series**)
- When two resistors **are in series** we can deduce an expression for the voltage across one of them
  - (1) i = Vtot / (R1 + R2); (2) V1 = i*R1; (3) V2 = i*R2
  - Substituting our expression for i into (2) and (3)

$$V1 = V_{tot}\left[\frac{R1}{R1+R2}\right] \; and \; V2 = V_{tot}\left[\frac{R2}{R1+R2}\right]$$

- The voltage across one of the resistors is proportional to the value of that resistor and the total series resistance
  - If you need 10 gallons of gas to drive 500 miles, how much gas you have you used up after driving 200 miles?
    - Gas = Voltage, Mileage = Resistance

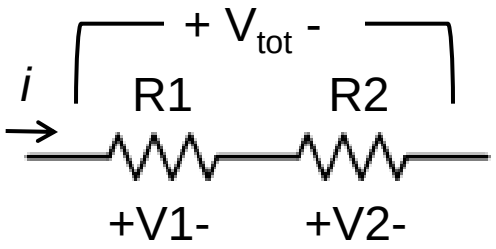

Voltage Divider Eqn: If two resistors Rx and Ry are in series then voltage across Rx is:

$$V1 = V_{tot} * [R1 / (R1 + R2)]$$

Memorize this. We will use it often!

Solving Voltage & Current

- Reconsidering the circuit to the right with…
  - Vdd = +5V, R1 = 400 ohms, R2 = 600 ohms
- Solve for the current through the circuit and voltages across each resistors (i.e. V1 and V2)
  - We can use the voltage divider concept to immediately arrive at the value of V2
  - $V2 = V_{dd}\left[\frac{R2}{R1+R2}\right]$

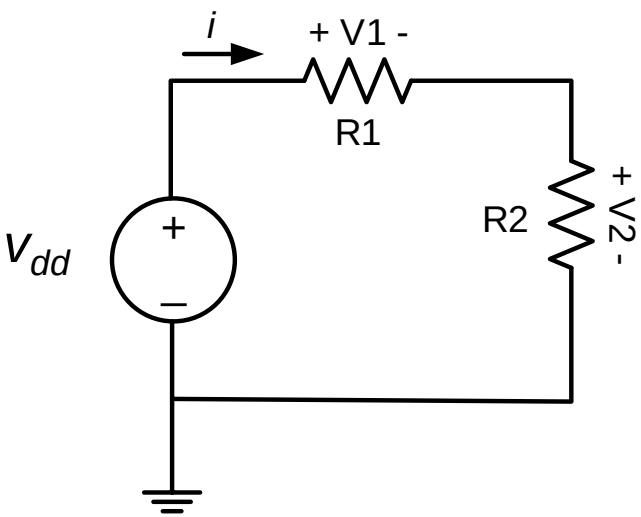

Solving Voltage & Current

- Consider the circuit on the right…
- Using KCL, KVL, and Ohm's law, what is the relationship between V1 and V3?
  - V1 = V3…Do a KVL loop around R3 to R1
- Can you solve for the voltage V1 (in terms of Vs, R1, R2, R3)?
  - Combine R1 and R3 using parallel resistor relationship
  - R1 and R3 can be combined to R_{eff} = (R1R3)/(R1+R3)
  - Now use voltage divider since "R_{eff}" and R2 are in series…
  - V1 = Vs*[R_{eff} / (R2 + R_{eff})]

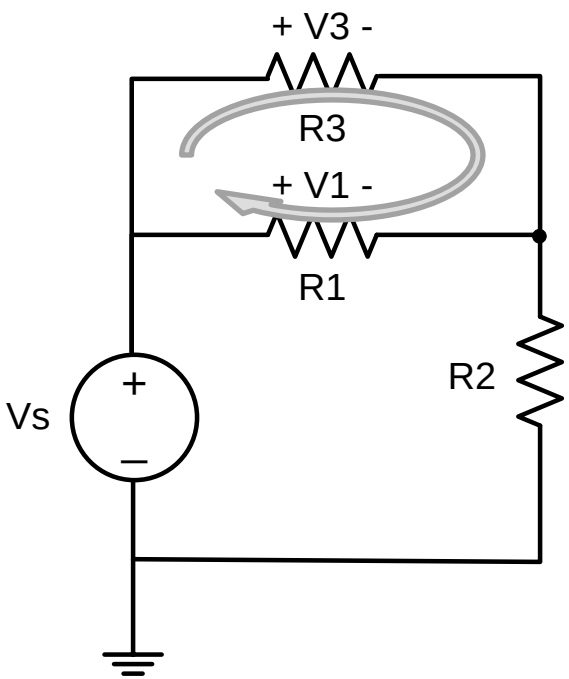

- Can you solve for the voltage V2 (in terms of Vs, R1, R2, R3)?
  - KVL says Vs – V1 – V2 = 0. We know Vs and just solved for V1 so we can plug into: V2 = Vs – V1

A Problem…

- Given the following parameters…
  - Vs=5V, R1=4, R2 = 12, R3 = 2 and R4 = 10 ohms.
- Can we use the voltage divider concept to immediately solve the voltage across R2 or do we need to first do some manipulation? What about R4?
- First, find the total equivalent resistance (R_{eq}) seen by Vs and then solve for the voltage across each resistor

Rtot = R1+[R2*(R3+R4)]/[R2+R3+R4]
= 10 ohms
i1 = Vs / Rtot = 5/10 = 0.5A
V1 = i1*R1 = 2V
V2 = 5V – 2V = 3V (using KVL)
V3 = 3 * 2/(2+10) (volt. divider)
= 3V * 1/6
= 0.5 V
V4 = V2 * R4/(R3 + R4) (volt. divider)
= 3V * 5/6
= 2.5V

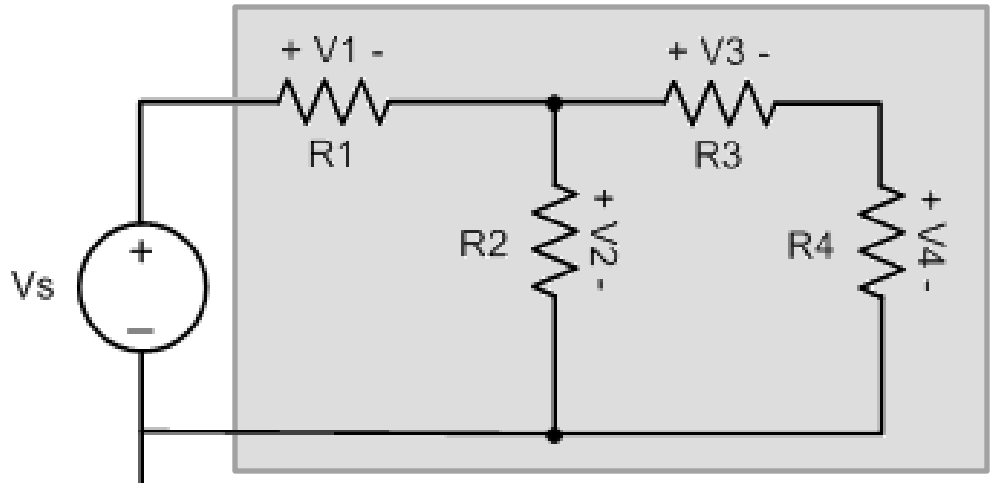

First collapse this to a single equivalent resistance, R_{eq}

…Continued (Blank Workspace)

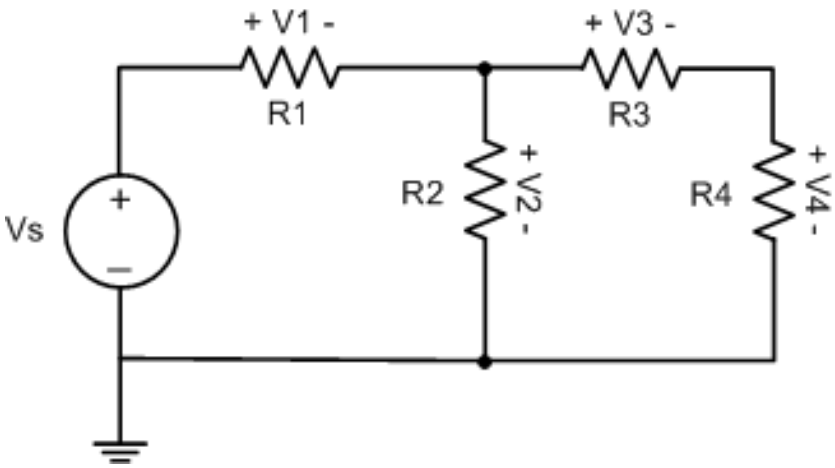

Commonly use lab items and how to reason about them using KVL, KCL, and Ohm's law…

LEDS AS OUTPUTS AND SWITCHES/BUTTONS AS INPUTS

Generating Inputs & Measuring Outputs

- Where do inputs to a digital circuit originate?
  - Usually as outputs from another digital circuit (i.e. USB connecting to your laptop's main processing system)
  - For our class right now: A button/switch controlled by a human (can be on or off)
- How will we know what voltage is coming out of a digital circuit?
  - Could use a voltmeter or oscilloscope (don't be afraid to use the equipment in our lab!)
  - LEDs are commonly used to show the status of a digital output to a human

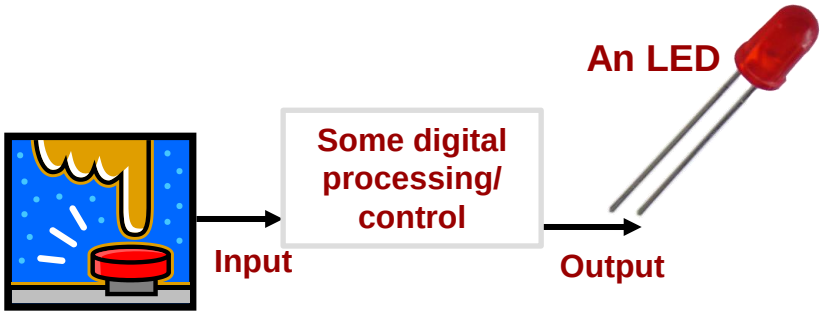

A button or switch (input stimulus)

Each key on your keyboard is essentially a digital input generated by a push button (pressed or not pressed)

The status indicator on the Caps Lock button is simply an LED controlled by a digital output.

(Light-Emitting) Diodes

- The simplest output we can control is an LED (Light-emitting diode) which is like a tiny light bulb
- An LED glows ('on') when current flows through it (i.e. when there is a voltage difference across it)
- LEDs are polarized meaning they only work in one orientation (longer leg must be at higher voltage)

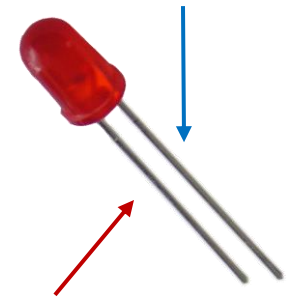

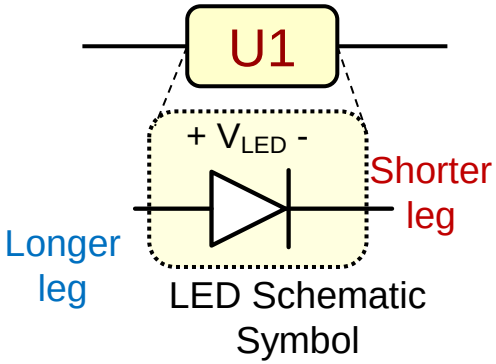

http://www.custobots.com/sites/default/files/imagecache/product_full/products/Solarbotics-redLED.gif

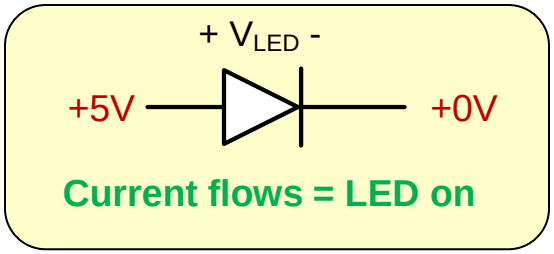

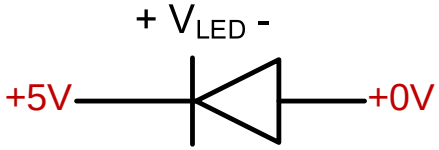

BACKWARDS!! No Current flows = LED off

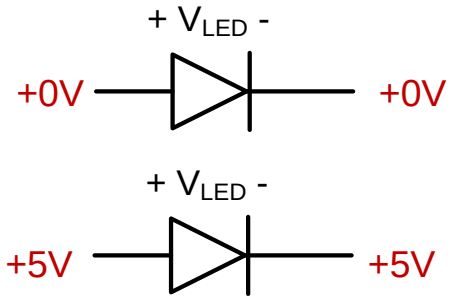

No voltage differential = No Current flows = LED off

Main Point: To be 'on', there must be a voltage difference across the LED making current flow.

Need for Series Resistor with LEDs

- **Problem**: LEDs may allow too much current to flow which may blow out the LED
- **Solution**: Use a series resistor to limit current
  - Amount of current will determine brightness of LED
  - R↑ then i↓ and thus LED brightness ↓
  - $i = V1/R1 = (Vs - V_{LED}) / R1$
  - Usually R1 is a few hundred ohms (200-500 ohms)

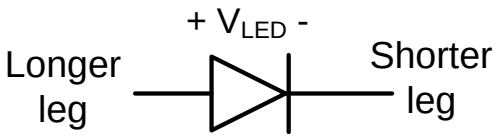

LED Schematic Symbol

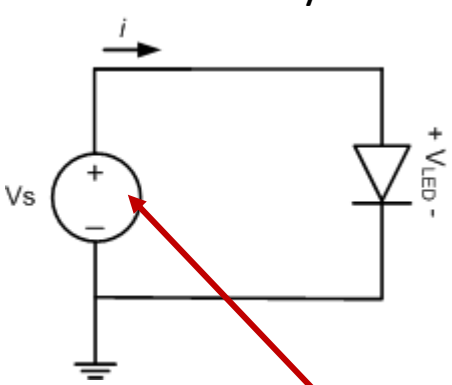

No current limitation…BAD

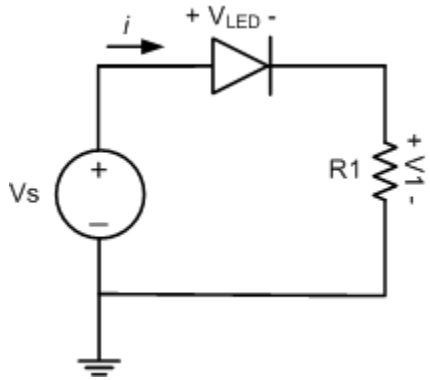

Choose resistor to limit current

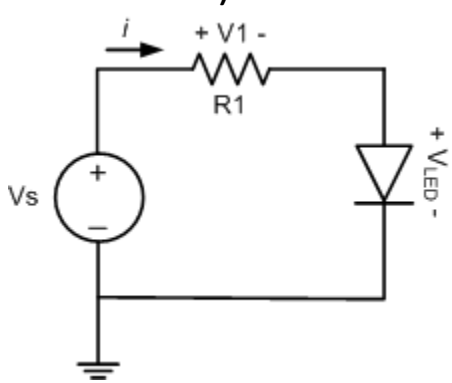

Doesn't matter where resistor is placed as long as it is in series

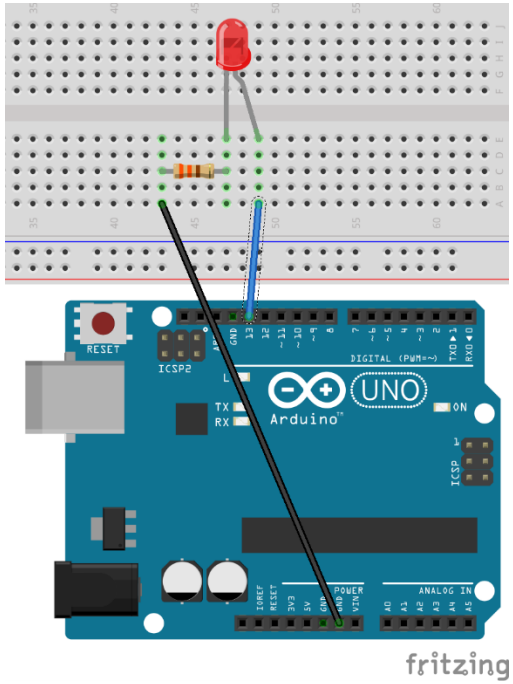

Breadboard view

A digital (gate) output will usually serve as our voltage source that can be either '0' (0V) or '1' (5V)

Main Point: LED's should always be connected in series with a current-limiting resistor

LED Connection Approaches

- When letting a digital output control an LED, the value (i.e. '0' = low or '1' = high voltage) that causes the LED to light up depends on how the circuit is wired
  - Note: Gates can often "sink" (take in) more current than they can "source" (push out), so option 2 may be preferred…but let's not worry about this now…let's use option 1

This box represents a digital output (e.g. your Arduino) that can generate a high (1) or low (0) voltage.

What digital output value must be present for the LED to be on?

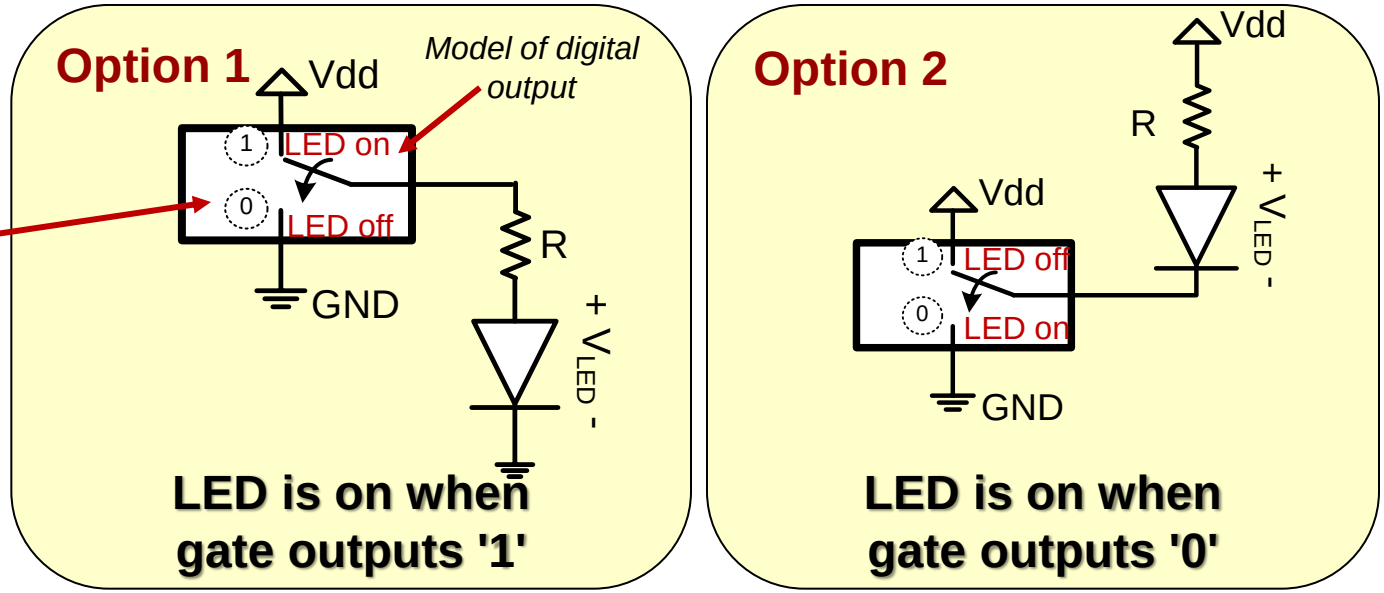

Main Point: LED's can light for either a logic '1' or '0' output…it depends on how they are wired.

Switch and PushButton Inputs

- Switches and pushbuttons can be in one of two configurations: open or closed
  - Switches can be opened or closed and then stay in that position until changed
  - Pushbuttons are open by default and require you to push them to close the circuit (they then open when you release)
- Can be used as an input to digital device

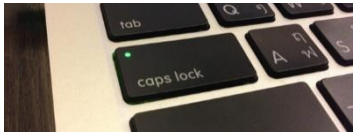

Example pushbuttons

Example switch

Switches and Pushbuttons

- Important Note 1: We can model a button or switch as a resistor of either 0 ohms or inf. (very large) ohms
  - When open a SW/PB looks like an infinite resistance (no current can flow)
  - When closed a SW/PB looks like a wire (R=0) and no voltage drops across it

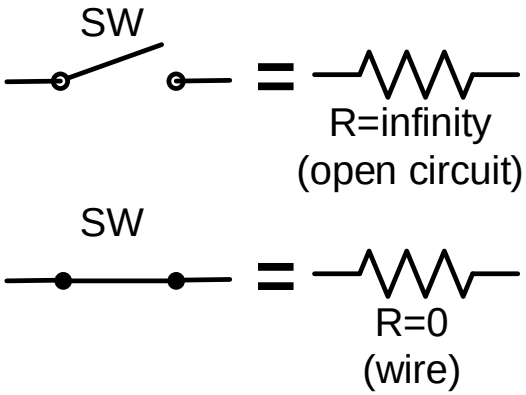

- **Question**: What voltage does an open or closed switch (pushbutton) generate?
- **Answer**: NOTHING.
- Important Note 2:
  - SW or PBs don't produce digital 0's or 1's on their own, they control what voltage (PWR/GND) is connected to your device

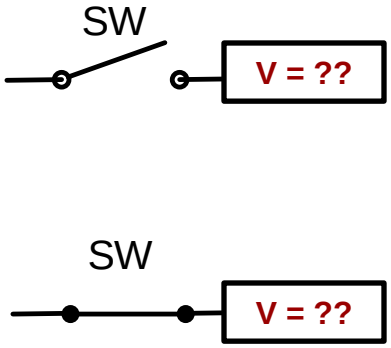

Connecting a Switch

- Switches only control the voltage going into a device, **they do not produce a voltage** (0V or 5V) by themselves
- Option 1: Attach one side to GND and the other side to the device
  - When the switch=open, nothing is connected to the device (a.k.a. "**floating**")
  - A floating input may sometimes appears as zero, and other times as a one.
  - We need the inputs to logic gates to be in either the 0 or 1 state…not floating
- Option 2:
  - When switch closed => low resistance connection from power to ground = LARGE current flow…BAD!!! (This is known as a "**short circuit**").

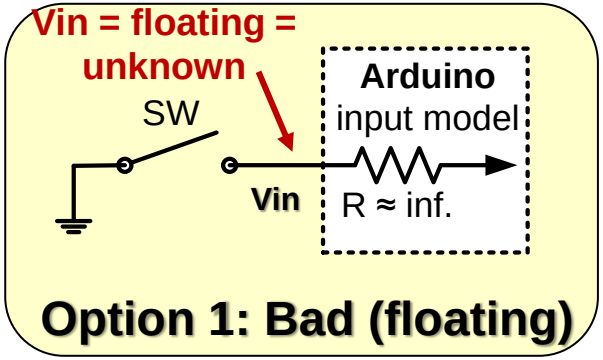

Switch Closed = 0V (Logic 0) to input
Switch Open = ??? (does not work)

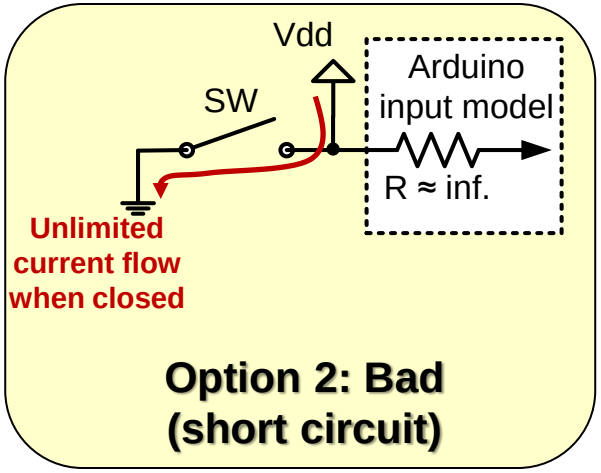

Switch Open = Vdd=5V (Logic 1) to input
Switch Closed = Short Circuit (does not work)

Preferred Wiring of Switches

- Solution: Put GND on the far side and a "pull-up" resistor at the input side
  - "Pull-up resistor" used to hold the input high unless something is forcing it to a zero
  - SW open => Arduino input looks like inf. Resistance in series with Rp. Thus, 0 current through Rp and thus no voltage drop across Rp…Vin = Vdd = Logic 1
  - SW closed => Direct wire from GND to input…input = GND = Logic 0…Also current flowing from Vdd to GND is limited by Rp preventing a short circuit.
  - Usually Rp is large (10k ohms) to limit current

Analogy:

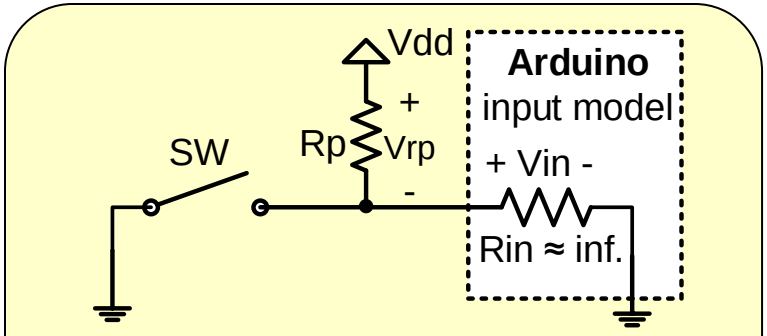

Preferred: Use a pullup resistor

To calculate Vin when switch is open:

Vin = Vdd * (Rin / (Rin + Rp))

Rp = inf. and so Vin = Vdd * 1

Main Point: Buttons & switches should have GND connected to one side & a pull-up resistor on the other

Power & Ground Connections

- Easy mistake when you're just learning to wire up circuits:
  - Wire the inputs & outputs but forget to connect power and ground
- All circuits and chips require a connection to a power source and ground
  - Digital circuits (aka "gates")
  - Switches
  - Buttons

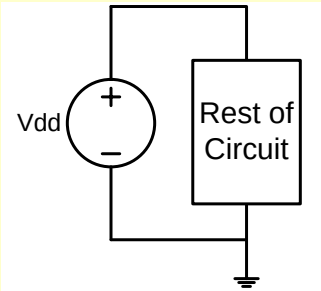

Actual connection…

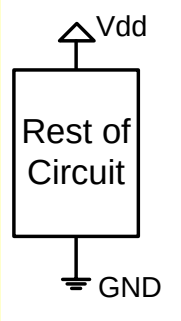

…will be drawn like this

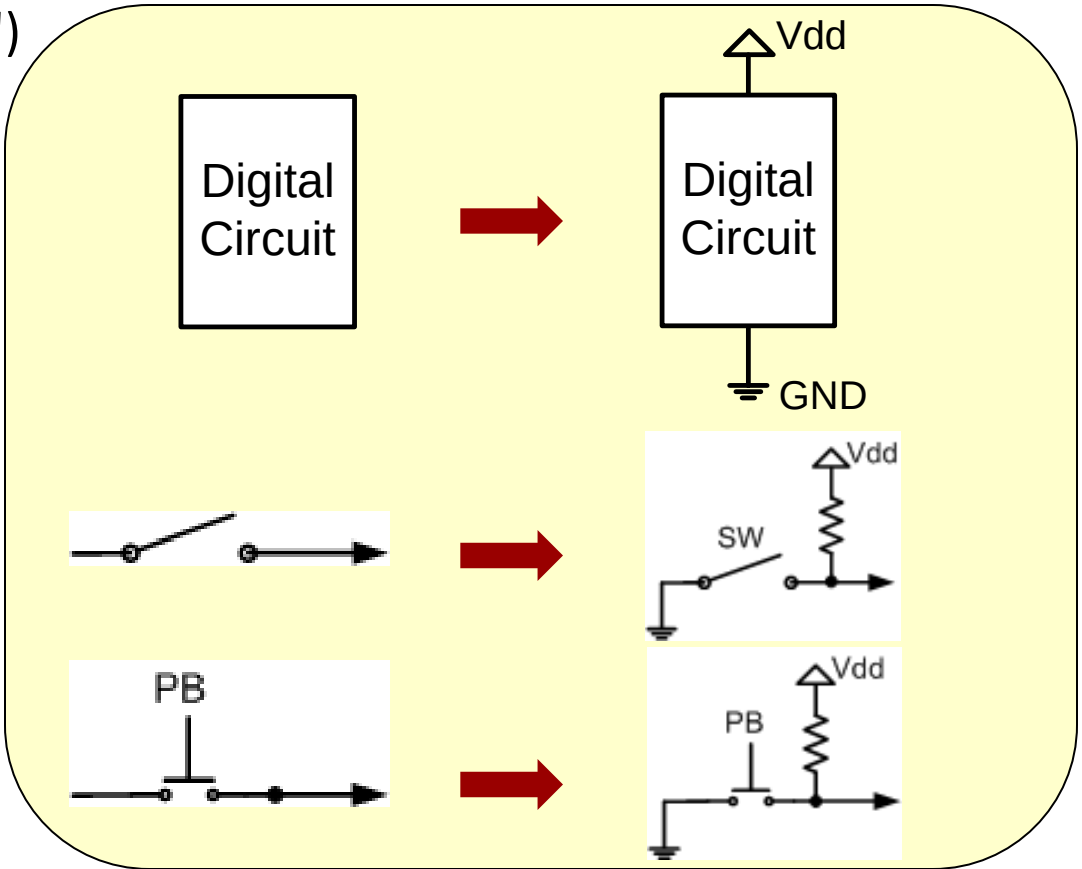

Summary

- KCL and KVL apply to **ALL** electronic devices
- Ohm's law applies **ONLY** to resistors and governs the relationship between the current through and the voltage across a resistor
- A resistor network can be collapsed to **a single equivalent resistance** by applying series and parallel transformations
- If two or more resistors are in series, the voltage across any of those resistors can be quickly found by applying the **voltage divider equation**
- LEDs are used as digital outputs and must be wired in the correct direction
- Switches can be modeled as a small (0) resistance when closed or large (inf.) resistance when open

BACKUP

Preferred Wiring of Switches

- Solution: Put GND on the far side and a "pull-up" resistor at the input side
  - "Pull-up resistor" used to hold the input high unless something is forcing it to a zero
  - SW open => Arduino input looks like inf. Resistance in series with Rp. Thus no current through Rp and thus no voltage drop across Rp…Vin = VDD = 1
  - SW closed => Direct wire from GND to input…input = GND = 0…Also current flowing from Vdd to GND is limited by Rp preventing a short circuit.
  - Usually Rp is large (10k ohms) to limit current

Analogy:

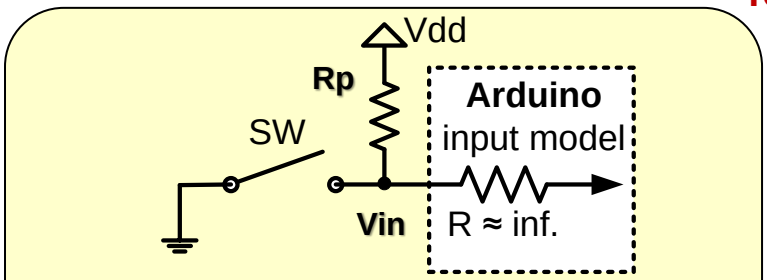

Preferred: Use a pullup resistor

To calculate Vin when switch is open:

$Vin = Vdd - V_{RP}$

$Vin = Vdd - i_{RP} * Rp$

i_{RP}=0 since in series with inf. resistance of Arduino input

Thus, Vin = Vdd

Main Point: Buttons & switches should have GND connected to one side & a pull-up resistor on the other