# CS103 Unit 2a – Pointers and Pass by Reference

CSCI 103L Teaching Team

# Unit 2 – Pointers and Memory

- The course is broken into 6 units (spirals), each consisting of:

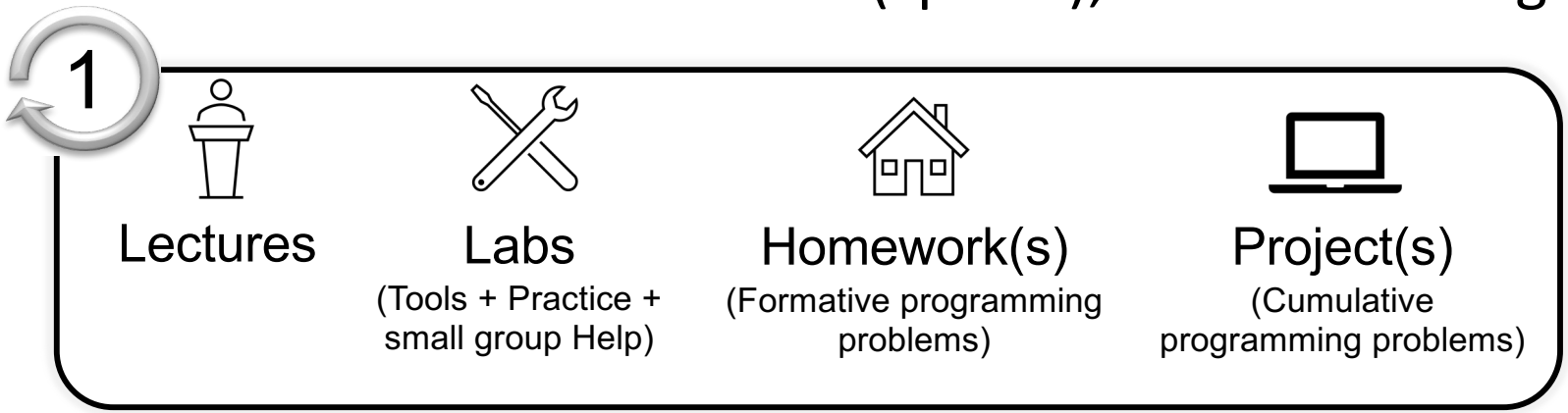


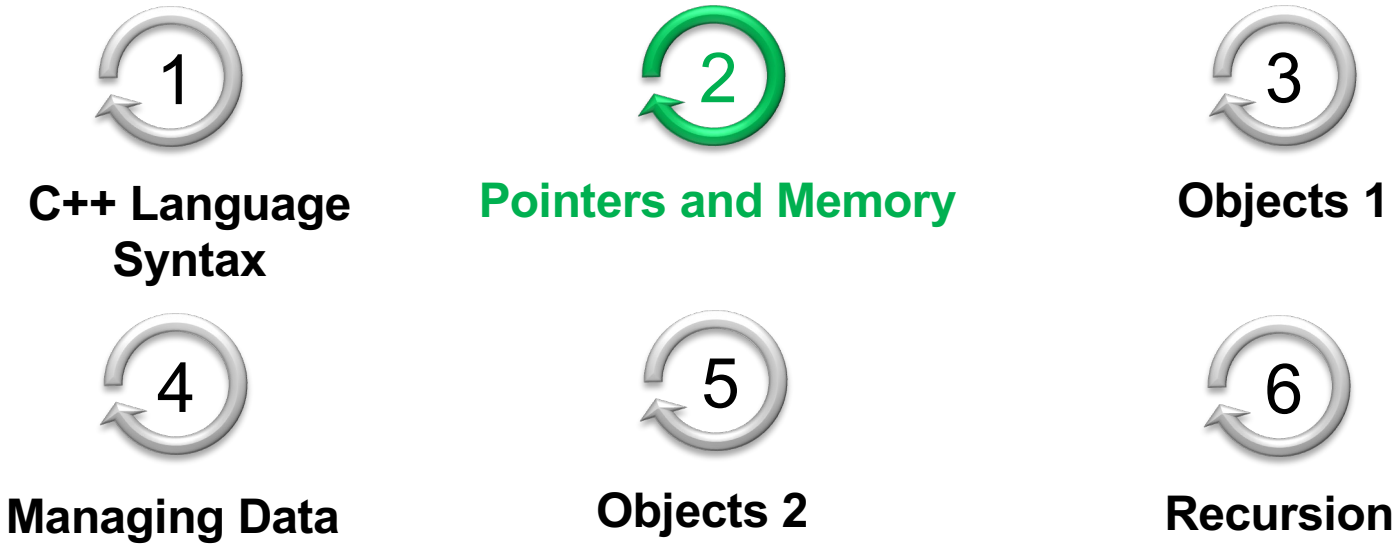

# INTRODUCTION TO POINTERS

# Recall: Pass-by-Reference Pros/Cons

- **Scenario**: You write a paper and include a lot of LARGE images. You need to send it to your teammates. You can
  - As a Google doc and simply e-mail the URL or
  - Attach the document/file in the e-mail or
- What are the pros of each approach?
- Google Doc
  - Less info to send (send link, not all data)
  - Reference to original (i.e. if original changes, you'll see it)
- Email Attachment
  - Can treat the copy as a scratch copy and modify freely

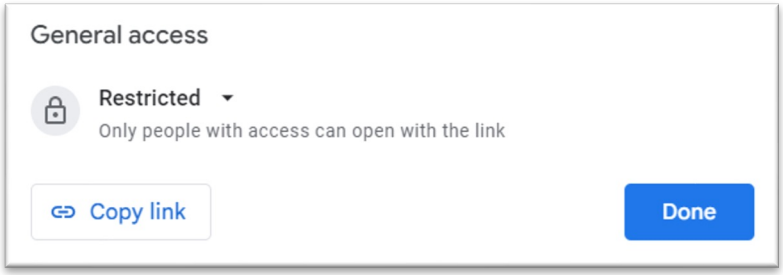


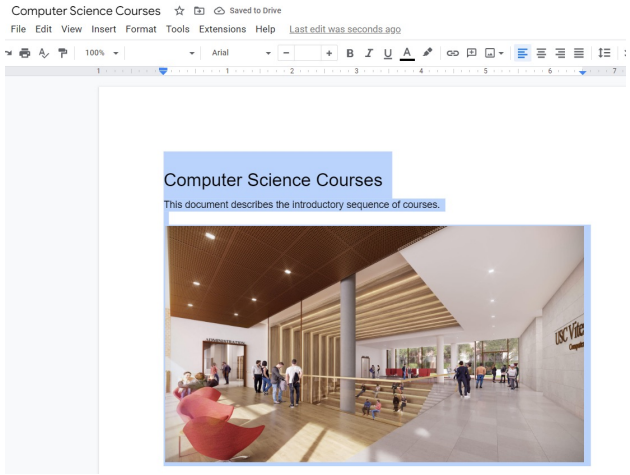

# Use Pointers when…

- We need **pass-by-reference** (as opposed to pass-by-value), either to:
  - **Change a variable (or variables) local to one function in some other function**
    - Analogy: a Google-doc link with "Can Edit" permission
  - **Avoid making needless copies** of data which wastes time
    - Analogy: A Google-doc link with "Can View" permission (think large arrays)
- We need to perform **dynamic memory allocation**
- We need to access a specific location in the computer (i.e. hardware devices) [Not covered in this class, but EE 109/CS 356]
  - Useful for embedded systems and device programming

All of these will be explained in the following slides.

# Pointer Analogy

- Imagine a set of lockers or safe deposit boxes each with a number (just like memory locations have an address)
- There are some boxes with gold jewelry and others that do not contain gold but simply hold a piece of paper with another box number written on it (i.e. a pointer to another box)
- What is stored in one box might be:
  - **[Box 7]**: Gold (i.e. data / something valuable like an int, double, etc.)
  - **[Box 9]**: The number of another box which contains gold (i.e. box 9 holds a **pointer-to** some other data)
  - **[Box 16]**: The number of another box which contains a number of a box containing gold (i.e. box 16 holds a **pointer-to** a **pointer-to** data)

Each box has a number to identify it (i.e. an address) and a value inside of it. So do variables in memory.

| | | | | | |
|---|---|---|---|---|---|
| 0 $_{8}$ | 1 | 2 $_{15}$ | 3 | 4 | 5 $_{3}$ |
| 6 $_{11}$ | 7 | 8 $_{4}$ | 9 $_{7}$ | 10 $_{3}$ | 11 |
| 12 | 13 $_{1}$ | 14 | 15 | 16 $_{9}$ | 17 $_{3}$ |

- The value of (i.e. what is in) one box might be the address of (pointer-to) another box.
- By changing the number in a box (i.e. the value of a pointer), we can have one location refer to many different locations, in succession.

# Pointer Analogy

- But what if rather than gold or other obviously valuable objects, the "valuable objects" were simply slips of papers with numbers.
  - Would you be able to **distinguish** whether a box is storing data or storing a pointer?
  - And if it is storing a pointer, would you know whether it is pointing at just 1 data element or an array of data elements?
- No! This is why we need:
  - Pointer **types** (e.g. `int*` or `char*`) to tell us that what's in this variable is a pointer as well as what kind of data we'll find when we follow (dereference) the pointer (e.g. `int` or `char`) .
  - To remember context on our own (as the programmer)

| | | | | | |
|---|---|---|---|---|---|
| 0 8 | 1 7 | 2 15 | 3 9 | 4 15 | 5 3 |
| 6 11 | 7 12 | 8 4 | 9 7 | 10 3 | 11 4 |
| 12 6 | 13 1 | 14 8 | 15 1 | 16 9 | 17 3 |

# Pointers

- Pointers are variables that store the address of some other variable in memory
- More abstractly, pointers are **references** to other "things" which can be:
  - **data** (i.e. ints, chars, doubles) or
  - other pointers
- The concept of a pointer is very common and used in many places in everyday life
  - Phone numbers or mailing addresses are references or “pointers” to your physical phone or location
  - Excel workbook has cell names we can use to reference the data ( =A1 means get data in A1)
  - URLs (www.usc.edu is a pointer to a physical HTML file on some server) and can be used in any other page to "point to" USC’s website

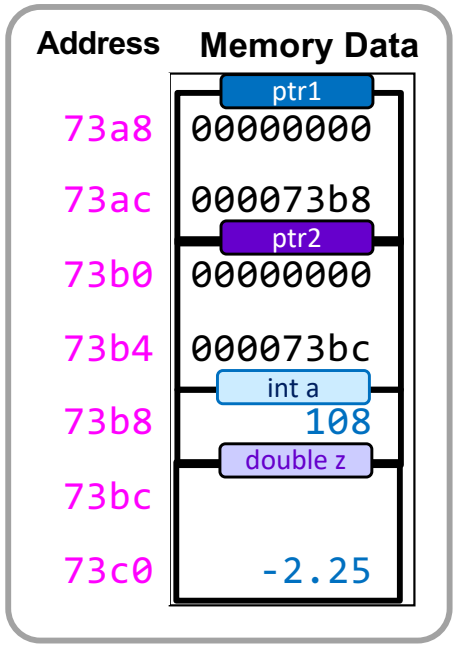

Prerequisites: Data Sizes, Computer Memory

# POINTER BASICS

# Steps To Using Pointers

- Variable
  - You can't use pointers without something to point to (create a variable of some type, **T var**)
    - Note: We use **T** as a placeholder for ANY type
- Pointer
  - Declare a pointer variable or argument (declare a variable of type **T* pvar**)
- Link
  - Generate the pointer/link to the variable using **&** operator (**&var**)
- Dereference (Use)
  - Follow the link to view or edit the variable using the * operator (*pvar)

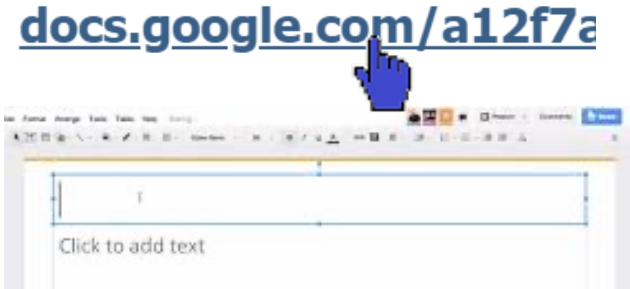

# C++ Pointer Operators

- 2 operators used to manipulate pointers (i.e. addresses) in C/C++: **&** (address-of op) and ***** (dereference op)
  - **&***<variable>* evaluates to the "address-of" *<variable>*
    - *Essentially, you get a pointer to a variable by writing &variable*
  - ******<pointer>* evaluates to the data pointed to by *<pointer>* (data at the address given by *<pointer>*)
  - **&** and ***** are **inverse operations**
    - We say **&** returns the address/reference/link of some value while ***** dereferences the address and returns the value
    - **&**variable => address/pointer
    - *****pointer => variable value
    - *****(**&**variable) => variable

# Generating a Pointer

- When a variable is declared, memory is allocated for it. Its **starting location** in memory is its address.
  - `int x = 30;`
  - `char y = 'a';`
  - `double z = 3.75;`
  - `int dat[2] = {103,42};`

variable

- To generate a pointer, use the & operator to get the address of a variable in C/C++
  (Tip: Read '&x' as 'address of x')
  - `&x => _____`
  - `&y => _____`
  - `&z => _____`
  - `&dat[1] = _____`
  - `dat => _____`

link

- Great, but what should we do with these pointers and where should we store them?

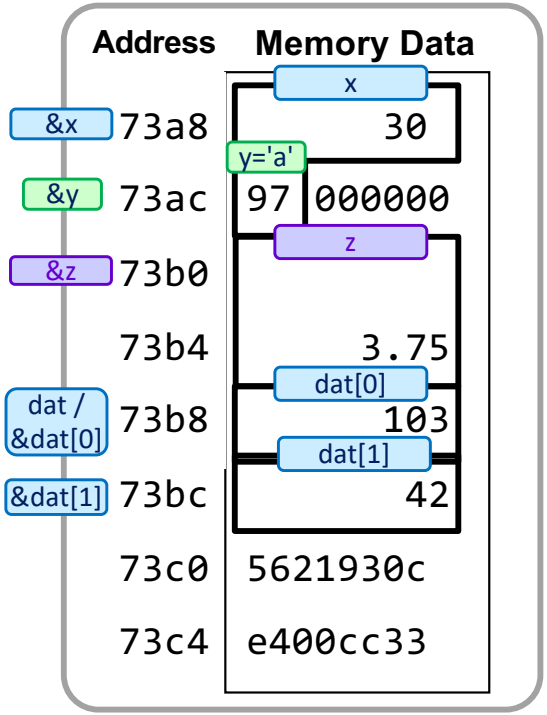


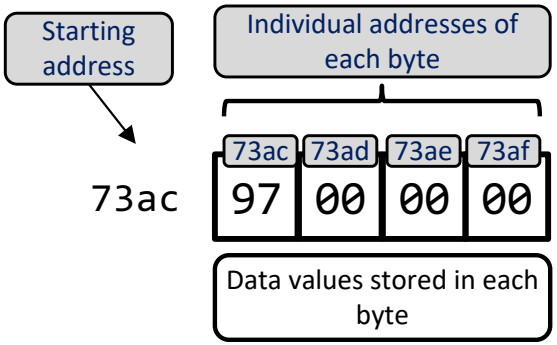

# Pointer Variables and their Declaration

- Data variable declarations:
  - `int x = 30;`
  - `char y = 'a';`
  - `double z = 3.75;`
  - `int dat[2] = {103,42};`

variable

- We can now declare **pointer variables** that don't store data but the **addresses of data**
- To declare a pointer, include a * after the type [e.g. **int***, which is read "pointer to (an) int(s)"]. That variable can then store pointers to (addresses of) the given type (e.g. int)
  - `int *ptr1 = &x;  // ptr1 = 0x73a8`
  - `double* ptr2 = &z; // ptr2 = 0x73b0`
  - `int* ptr3 = &y;  // Error! Type mismatch.`

pointer link

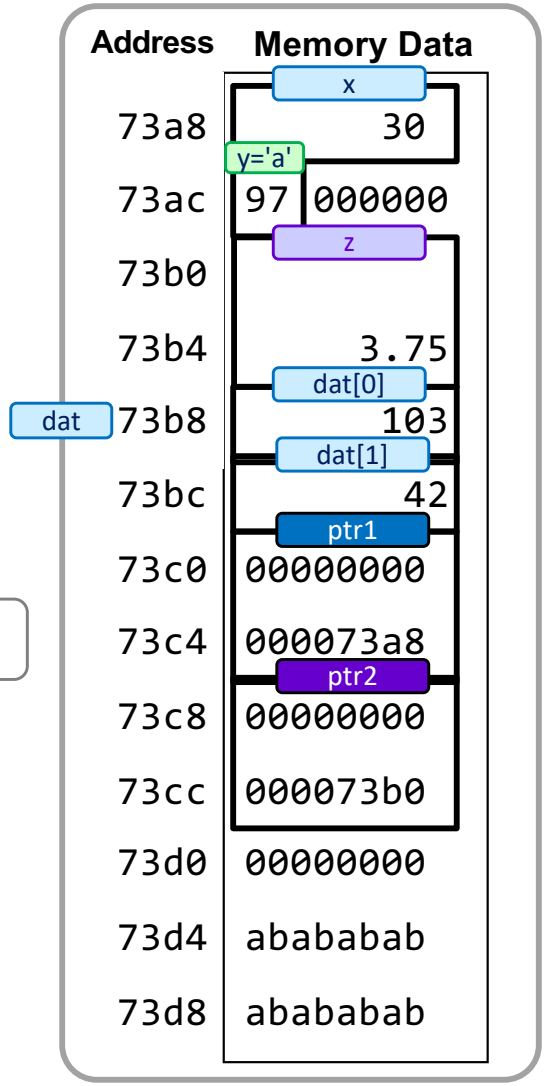


Notes:
1. Pointers should ONLY store the addresses of variables of its declared type (int* pointers should only point at ints, not chars)
2. Best to immediately initialize a pointer with the address of some variable, rather than leave it uninitialized.
3. Where the * is in the declaration (i.e. next to the type or variable name) does not matter [e.g. int* ptr1 ..or.. int *ptr1].

# Dereferencing Pointer Variables

- Data variable declarations:
  - `int x = 30;`
  - `char y = 'a';`
  - `double z = 3.75;`
  - `int dat[2] = {103,42};`

variable

- We can declare pointer variables that store addresses of other variables
  - `int *ptr1 = &x;  // ptr1 = 0x73a8`
  - `double* ptr2 = &z; // ptr2 = 0x73b0`

pointer link

- We can access the data whose address is stored in a pointer variable by **dereferencing it** using the ***** operator. *ptr can be read as, "get/set **the data** at the address stored in ptr")
  - `dat[1] = *ptr1 + 5;  // dat[1] = 35`
  - `*ptr2 = *ptr2 - 1.25;  // z = 2.5`

use / dereference

- It may be confusing but notice the * appears both in the declaration and in the dereference expression. Context is important to distinguish. More on the next slide…

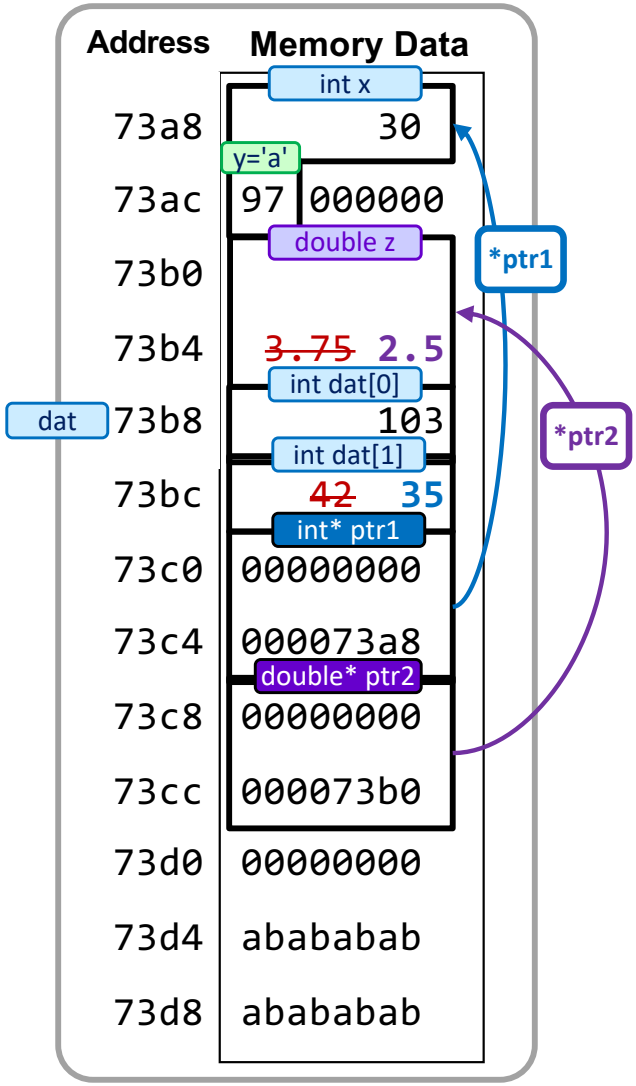

# Cutting through the Syntax

- * after a type = declare/allocate a pointer variable
- * in an expression/assignment = dereference

| | Declaring a pointer | De-referencing a pointer |
|---|---|---|
| `char *p` | ✓ | |
| `x = *p + 1` | | ✓ |
| `int* ptr` | ✓ | |
| `*ptr = 5` | | ✓ |
| `(*ptr)++` | | ✓ |
| `char* p1[10];` | ✓ | |

Helpful tip to understand syntax: We declare a pointer as:

- int *ptr because when we dereference it as *ptr, we get an int
- char *p is a declaration of a pointer and thus, *p yields a char

# Assigning to Pointer Variables

- Data variable declarations:
  - `int x = 30;`
  - `char y = 'a';`
  - `double z = 3.75;`
  - `int dat[2] = {103,42};`
- Declaring pointer variables and setting them with addresses (using &):
  - `int *ptr1 = &x;  // ptr1 = 0x73a8`
  - `double* ptr2 = &z; // ptr2 = 0x73b0`
- **Dereferencing** pointer variables (using *) to get data pointed to:
  - `dat[1] = *ptr1 + 5;  // dat[1] = 35`
  - `*ptr2 = *ptr2 – 1.25;  // z = 2.5`
- We can change what variable the pointer references by assigning a new address to it and dereference the pointer as many times as we like
  - `ptr1 = &dat[1];`
    `int a = *ptr1 % 10;  // a = 5 after exec.`
  - `ptr1 = dat;  // why is & not needed?`
  - `*ptr1 += 1;  // dat[0] = 104`
  - `*ptr2 = *ptr1 - *ptr2;`

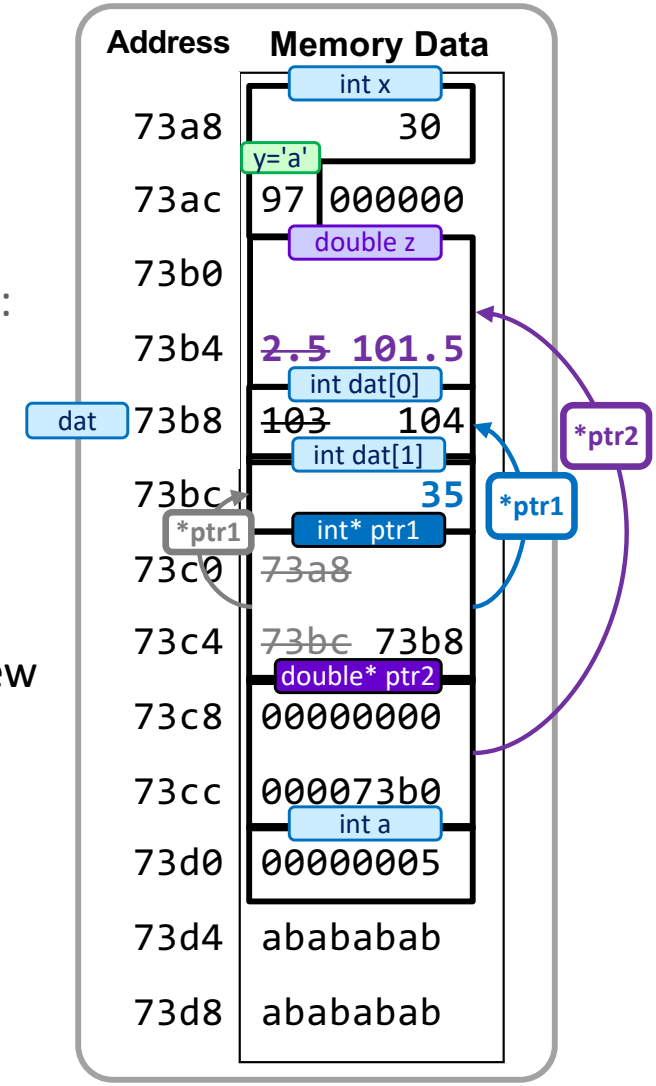

# Skill: Drawing Data Diagrams

- Though painful, it is helpful to draw out relevant data diagrams, especially when pointers are involved
  - Draw a table with a column for each variable (or just a box for each variable)
  - Label the column header with the variable name and a **made-up address.** Use whatever number is easiest for your address: @100, @500, etc.)
  - Annotate the variable values as you evaluate each line of code
- DS Malik Textbook: Chapter 13, Question 6

```
int x, y;
int *p = &x;
int* q = &y;
x = 35; y = 46;
p = q;
*p = 78;
cout << x << " " << y << endl;
cout << *p << " " << *q << endl;
```

variable

pointer

link

use / dereference

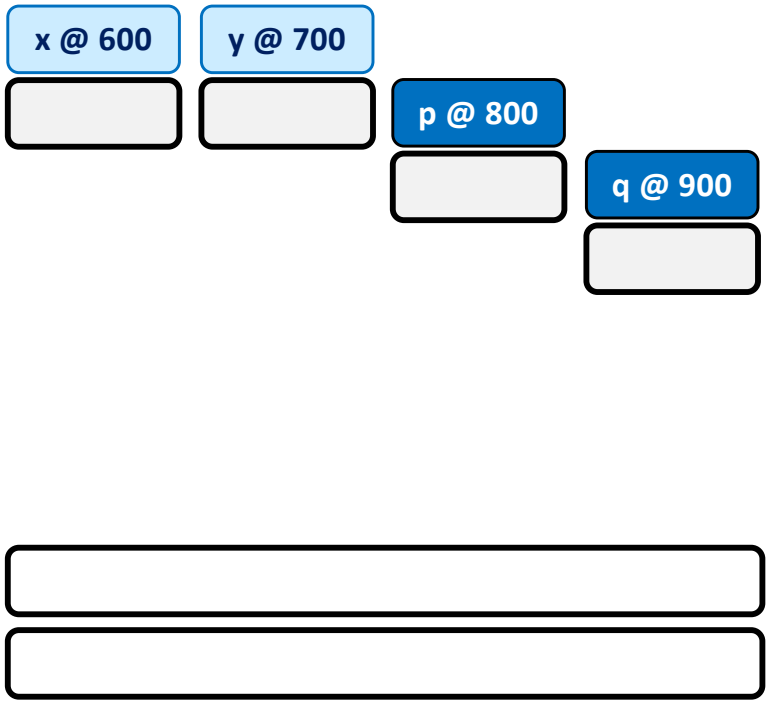

# Skill: Drawing Data Diagrams (Sol)

- Though painful, it is helpful to draw out relevant data diagrams, especially when pointers are involved
  - Draw a table with a column for each variable (or just a box for each variable)
  - Label the column header with the variable name and a **made-up address.** Use whatever number is easiest for your address: @100, @500, etc.)
  - Annotate the variable values as you evaluate each line of code
- DS Malik Textbook: Chapter 13, Question 6

```
int x, y;
int* p = &x;
int* q = &y;
x = 35; y = 46;
p = q;
*p = 78;
cout << x << " " << y << endl;
cout << *p << " " << *q << endl;
```

variable

pointer

link

use / dereference

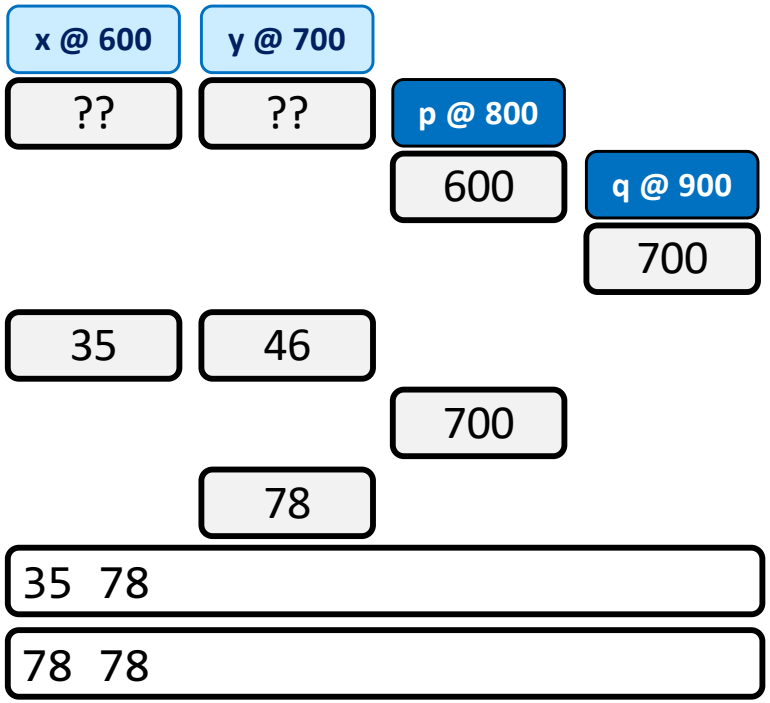

# Pointer Summary

- To summarize:
  - We can declare pointer variables to store addresses (not data) using the syntax T* where T is some type (e.g. `int *p`)
  - We can get the address of some variable using the & operator (e.g. &x, &y)
    - Most often, this would then be assigned to a pointer variable (e.g. `p = &x`)
  - We can dereference a pointer (i.e. follow a pointer) to get the data from the address it stores by using the * operator (e.g. `cout << *p << endl`)
  - We can **change the address** the pointer stores to have it reference some other variable (e.g. `p = &z`)
- But why do we need them?
  - Can't we just access x, y, and z directly?

```
int main(int argc, char *argv[])
{
  int x = 103;
  char y = 'a';
  int z = 42;

  int*  p = &x;
  char *q = &y;

  *p = 42;
  cout << *p << endl;

  p = &z;

  cout << *p << endl;

  return 0;
}
```

Prerequisites: Pointer Basics

# PASS BY REFERENCE

# Recall: Pass-by-Value

- Each function has its own memory on the the **system stack** where all data related to the function is stored including:
  - **Local variables**
  - **Arguments to the function**
  - Return link (where to return) to the calling code
- When parameters are passed, a copy is made of the argument from the caller's area of the stack to a new location in the callee's area of the stack (aka pass-by-value)
  - This prevents one function from modifying the variables of another
- But what if we want a function to modify the data from another?
- We can use pointers!!! (aka pass-by-reference)

```
// Prototype
void dec(int);

int main()
{
  int y = 3;
  dec(y);
  cout << y << endl;  // prints ___
  return 0;
}

void dec(int y)
{
   y--;
}
```

**Stack Area of RAM**

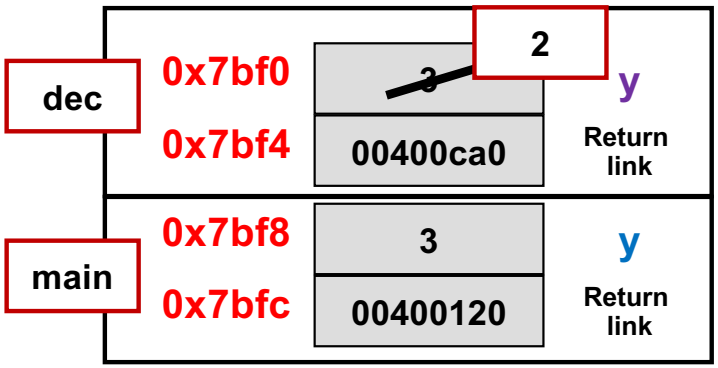

# Pass-by-(Pointer) Reference

- We can now pass a pointer to a local variable from the caller function as an argument to the callee function.
- The pointer argument lives on the stack of the callee function but can be used (by dereferencing it) to access the local variable from the caller and modify its data.
- When the callee finishes and returns, the pointer argument dies, but the caller will now see the updated value of its local variable.
- Can you follow the syntax of the code to the right?

```
// Prototype
void dec(int*);

int main()  // caller
{
  int y = 3;
  dec(&y);
  cout << y << endl; // prints 2
  return 0;
}

void dec(int* ptr)  // callee
{
   *ptr = *ptr - 1; // or (*ptr)--;
}
```

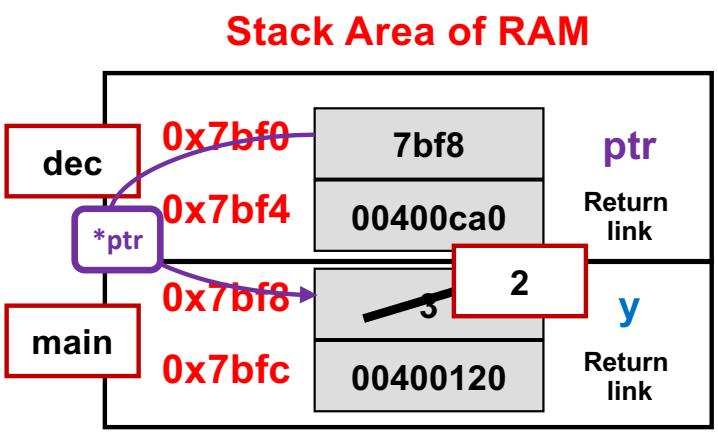

# Swap Two Variables – (PB-Value Blank)

- Classic example of issues with local variables:
  - Write a function to swap two variables
- Pass-by-value doesn't work
  - Copy is made of x,y from main and passed to x,y of sawpit
  - Swap is performed on the copies

**Can you make a memory diagram of what is on the stack for swap2()?**

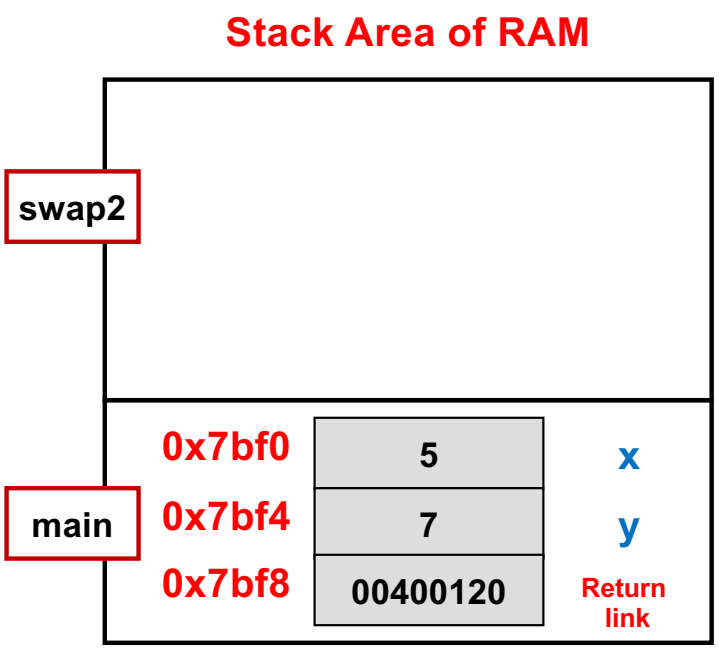


```
#include <iostream>
using namespace std;
void swap2(int x, int y);

int main()
{
  int x=5,y=7;
  swap2(x,y);
  cout << " x=" << x;
  cout << " y=" << y << endl;
}
void swap2(int x, int y)
{
   int temp = x;
   x = y;
   y = temp;
}
```

# Swap Two Variables – (PB-Value)

- Classic example of issues with local variables:
  - Write a function to swap two variables
- Pass-by-value doesn't work
  - Copy is made of x,y from main and passed to x,y of swap2
  - Swap is performed on the copies

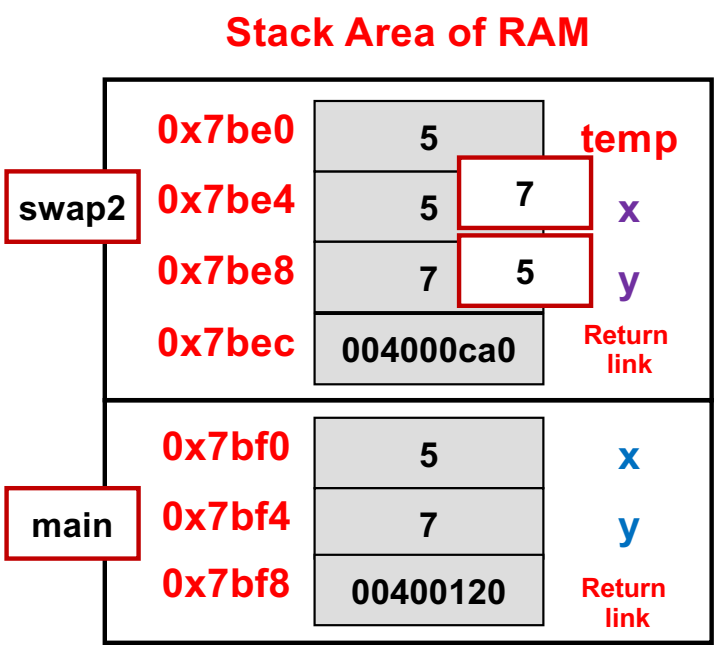


```
#include <iostream>
using namespace std;
void swap2(int x, int y);

int main()
{
  int x=5,y=7;
  swap2(x,y);
  cout << " x=" << x;
  cout << " y=" << y << endl;
}
void swap2(int x, int y)
{
   int temp = x;
   x = y;
   y = temp;
}
```

# Swap Two Variables – (PB-Ref Blank)

- Classic example of issues with local variables:
  - Write a function to swap two variables
- Pass-by-reference (pointers) does work
  - Addresses of the actual x,y variables in main are passed
  - Use those address to change those physical memory locations

**Can you fill in the values for x and y in swap2()?**

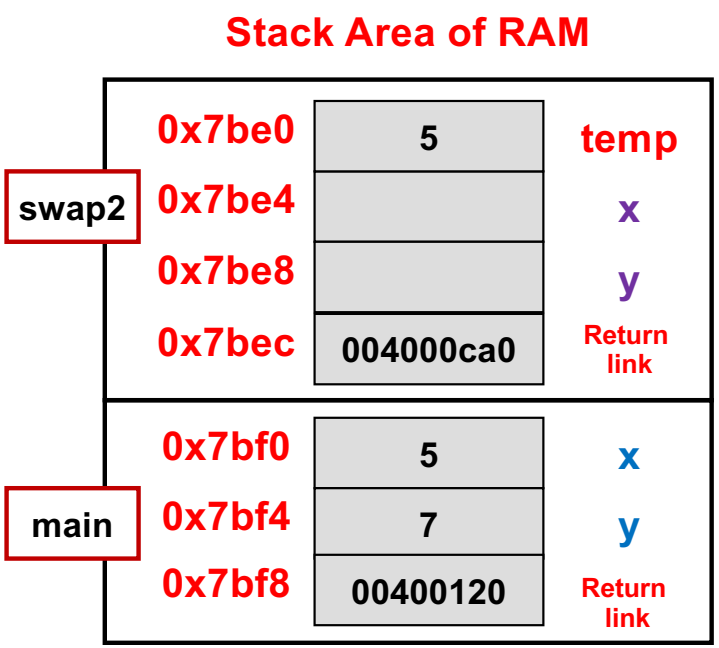


```
#include <iostream>
using namespace std;
void swap2(int* x, int* y);

int main()
{
  int x=5,y=7;
  swap2(&x, &y);
  cout << " x=" << x;
  cout << " y=" << y << endl;
}
void swap2(int* x, int* y)
{
   int temp = *x;
   *x = *y;
   *y = temp;
}
```

# Swap Two Variables – (PB-Ref)

- Classic example of issues with local variables:
  - Write a function to swap two variables
- Pass-by-reference (pointers) does work
  - Addresses of the actual x,y variables in main are passed
  - Use those address to change those physical memory locations

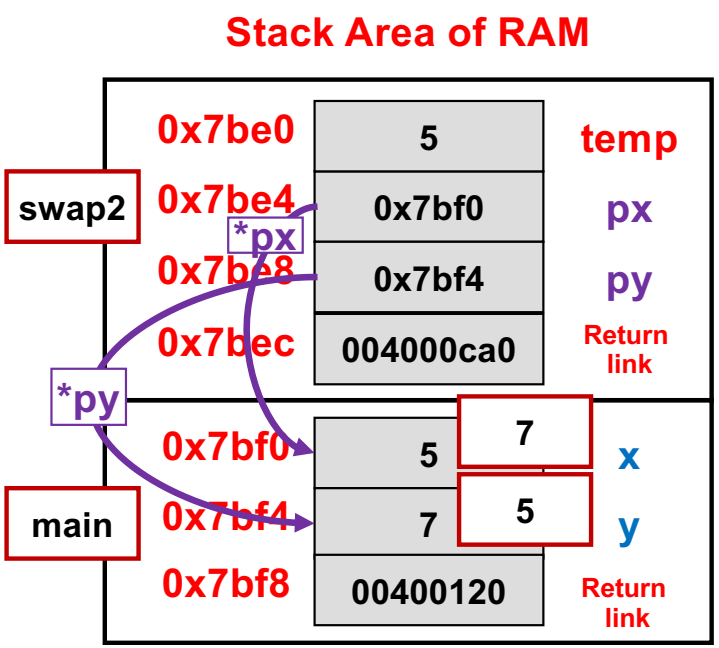


```
#include <iostream>
using namespace std;
void swap2(int* x, int* y);

int main()
{
  int x=5,y=7;
  swap2(&x, &y);
  cout << " x=" << x;
  cout << " y=" << y << endl;
}
void swap2(int* px, int* py)
{
   int temp = *px;
   *px = *py;
   *py = temp;
}
```

# Correct Usage of Pointers

- Commonly functions will take some inputs and produce some outputs
  - We'll use a simple 'multiply' function for now even though we can easily compute this without a function
  - We could use the return value but let's practice with pointers and say mul() must return void
- Can use a pointer to have a function modify the variable of another

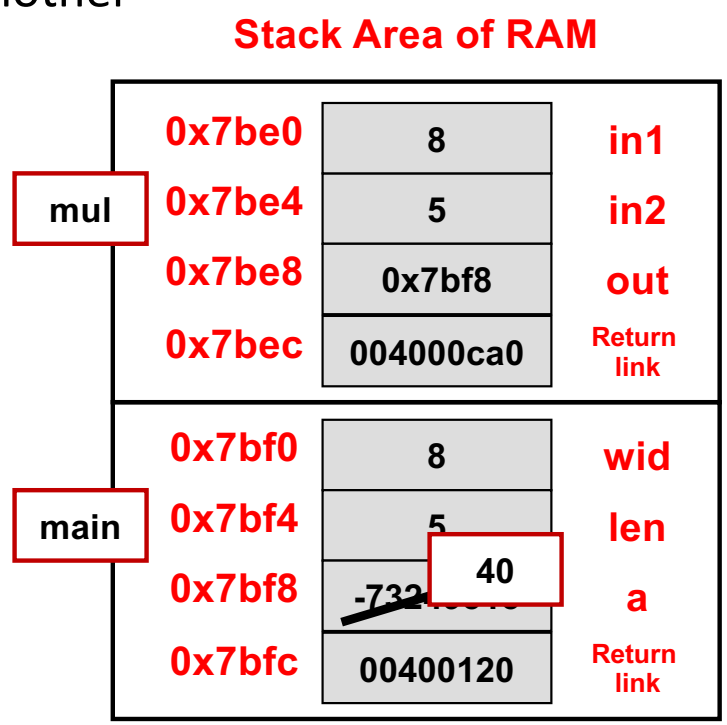


```
// Computes the product of in1 & in2
int mul1(int in1, int in2);
void mul2(int in1, int in2, int* out);


int main()
{
  int wid = 8, len = 5, a;
  mul2(wid,len,_______);
  cout << "Ans. is " << a << endl;
  return 0;
}

int mul1(int in1, int in2)
{
  return in1 * in2;
}

void mul2(int in1, int in2, _______)
{
  ________ = in1 * in2;
}
```

# Correct Usage of Pointers

- Commonly functions will take some inputs and produce some outputs
  - We'll use a simple 'multiply' function for now even though we can easily compute this without a function
  - We could use the return value but let's practice with pointers and say mul() must return void
- Can use a pointer to have a function modify the variable of another

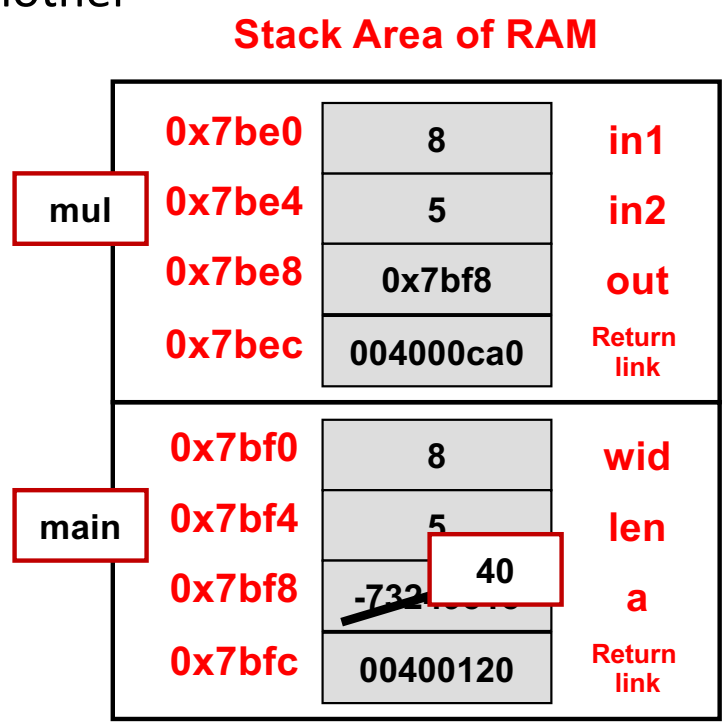


```
// Computes the product of in1 & in2
int mul1(int in1, int in2);
void mul2(int in1, int in2, int* out);


int main()
{
  int wid = 8, len = 5, a;
  mul2(wid,len,&a);
  cout << "Ans. is " << a << endl;
  return 0;
}

int mul1(int in1, int in2)
{
  return in1 * in2;
}

void mul2(int in1, int in2, int* out)
{
  *out = in1 * in2;
}
```

# Pass-by-Reference Template

- To modify a type T variable named var:
  - Set the function to take a `T* varptr`
  - Pass `&var` in the caller function to create and send a pointer to the function.
  - In the called function, dereference the pointer and assign:
    `*varptr = value`

```
// here T = double
void f1(double* pvar)
 { *pvar = 3.9; }

int main() {
  double var;
  f1(&var);
  cout << var << endl;
  return 0;
}
```

```
// here T = int*
void f2(int dat[], int len, int** pptr)
{
  int maxidx = 0;
  // loop to find the index of max
  *pptr = &dat[maxidx];
}

int main() {
  int dat[10] = { … };
  int* ptr;
  f2(dat, 10, &ptr);
  cout << "Max: " << *ptr << endl;
  return 0;
}
```

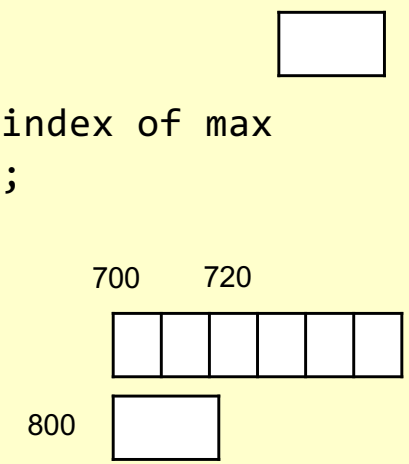

# Misuse of Pointers

- Make sure you don't return a pointer to a dead variable
- You might get lucky and find that old value still there, but likely you won't

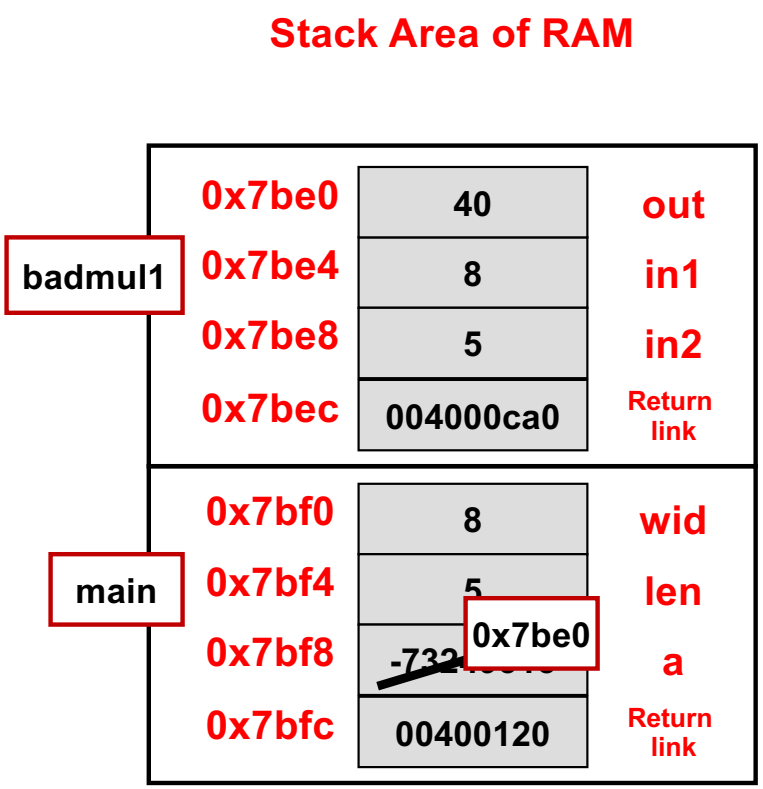


```
// Computes the product of in1 & in2
int* badmul1(int in1, int in2);


int main()
{
  int wid = 8, len = 5;
  int *a = badmul1(wid,len);
  cout << "Ans. is " << *a << endl;
  return 0;
}

// Bad! Returns a pointer to a var.
// that will go out of scope
int* badmul1(int in1, int in2)
{
  int out = in1 * in2;
  return &out;
}
```

Prerequisites: Pointer Basics, Data Sizes

# POINTER ARITHMETIC AND ARRAYS

# Review Questions

- The size of an 'int' is how many bytes?
  - ____
- The size of a 'double' is how many bytes?
  - ____
- T/F: The elements of an array are stored contiguously in memory
  - _____
- In an array of integers, if dat[0] lived at address 0x200, dat[1] would live at…?
- If ptr pointed to an int @0x200 what value for ptr++ makes sense?
- If ptr pointed to a double @0x200 what value for ptr++ makes sense?

# Big Idea: Array Names ⇔ Pointers

- **Big idea**: Array names and pointers are interchangeable
  - An array name is a pointer and a pointer can be used as an array name!
- Why? Because an array name by itself evaluates to:
  - _____
  - An array name is simply a pointer to the 0th element of that data type (i.e. an `int*`).
    - Given the declaration `int dat[10]`, dat is an _____ (type)
    - Given the declaration `char str[6]`, str is a _____ (type)
  - A pointer (i.e. `int* ptr;`) can be used as an array name once you point it to some location (see example below)

```
int dat[5] = {10,11,12,13,14};
*dat = 1;              // array name as ptr: same as dat[0] = 1;
int *p = dat;          // array name as ptr: same as int* p = &dat[0]
p[1] = p[2]-8;         // ptr as array name: same as dat[1]=dat[2]-8
```

- This is possible through **pointer arithmetic**.

# Pointer Arithmetic

- Logical Progression: Pointers are variables storing addresses => addresses are just numbers => we can perform arithmetic on numbers => we should be able to perform arithmetic on pointers!
- We can perform addition or subtraction on pointer variables (i.e. addresses) just like any other variable. This is known as pointer arithmetic.
- **Important Difference**: The number added/subtracted is implicitly **scaled** (multiplied) by the size of the **type** pointed to, ensuring the resulting address points to a valid data item

```
int dat[6];

int* ptr = &dat[2];

ptr1 += <offset>;
```

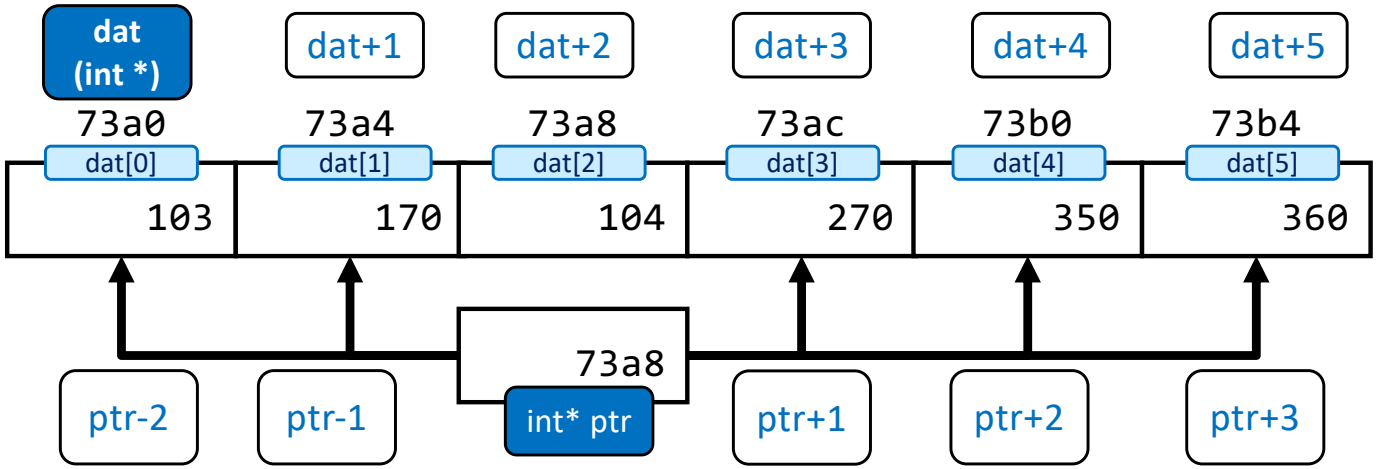

# Pointer Arithmetic

- Pointer arithmetic implicit scales the added value based on the type of pointer
  - For an `int*`, adding +2 really adds +2 * `sizeof(int)` = +2*4 = 8 so that the pointer will point 2 integers away
  - For a `double*`, adding +2 really adds +2 * `sizeof(double)` = +2*8 = 16 so that the pointer will point 2 doubles away

```
double gpa[6];

double* p2 = gpa+2

p2 += <offset>;
```

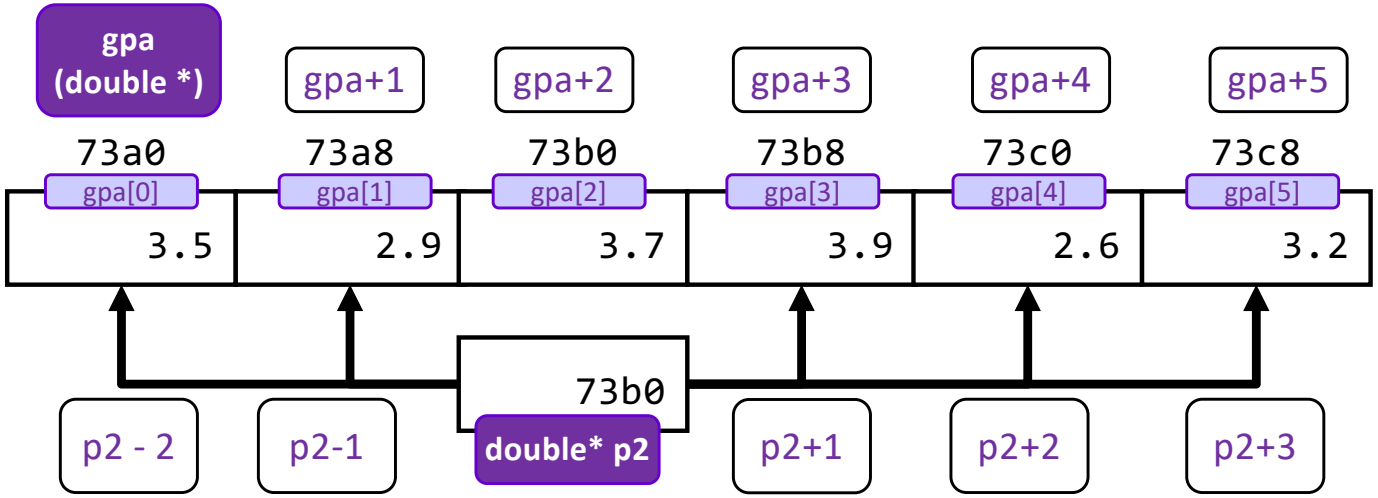

# Pointer Arithmetic

- Pointer arithmetic implicit scales the added value based on the type of pointer
  - For a `char*`, adding +2 really adds +2 * `sizeof(char)` = +2*1 = 2 so that the pointer will point 2 chars away

```
char ltr[6];

char* p3 = ltr+2

p3 += <offset>;
```

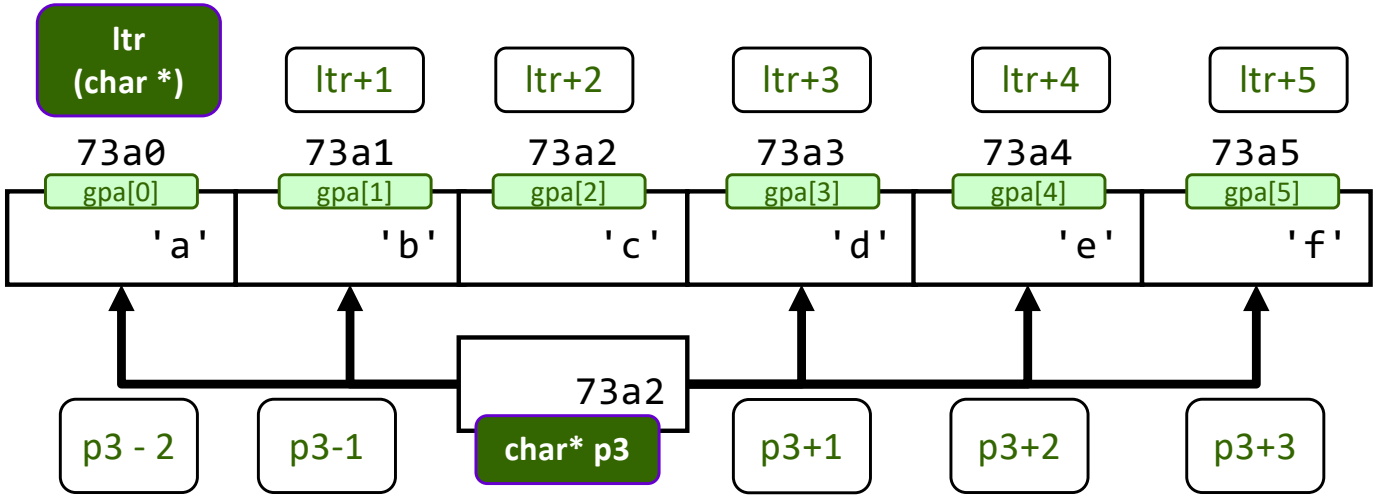

# Pointer Arithmetic Examples

- The number added/subtracted to the pointer is implicitly **scaled** (multiplied) by the size of the **type** pointed to, ensuring the resulting address points to a valid data item

```
int dat[] = {103, 5, 1}
int len=0;
double gpa[3] = {3.7, 3.5, 3.1};
int *ptr1 = dat;
*ptr1 = 104;
ptr1 = ptr1 + 2; // addr. inc. by ___ (2*sizeof(int))
(*ptr1)++;  // increment the dereferenced value
ptr1--;     // addr. dec. by ___ (1*sizeof(int))
double *ptr2 = gpa;
ptr2 += 2;   // ptr2 addr. + ___ (2*sizeof dbl)
*ptr2++ = 4.0;  // set dereferenced value to 4.0 then
             // increment addr. by ___ (1*sizeof(double))
// *ptr2 = 2.9;  What if??
```

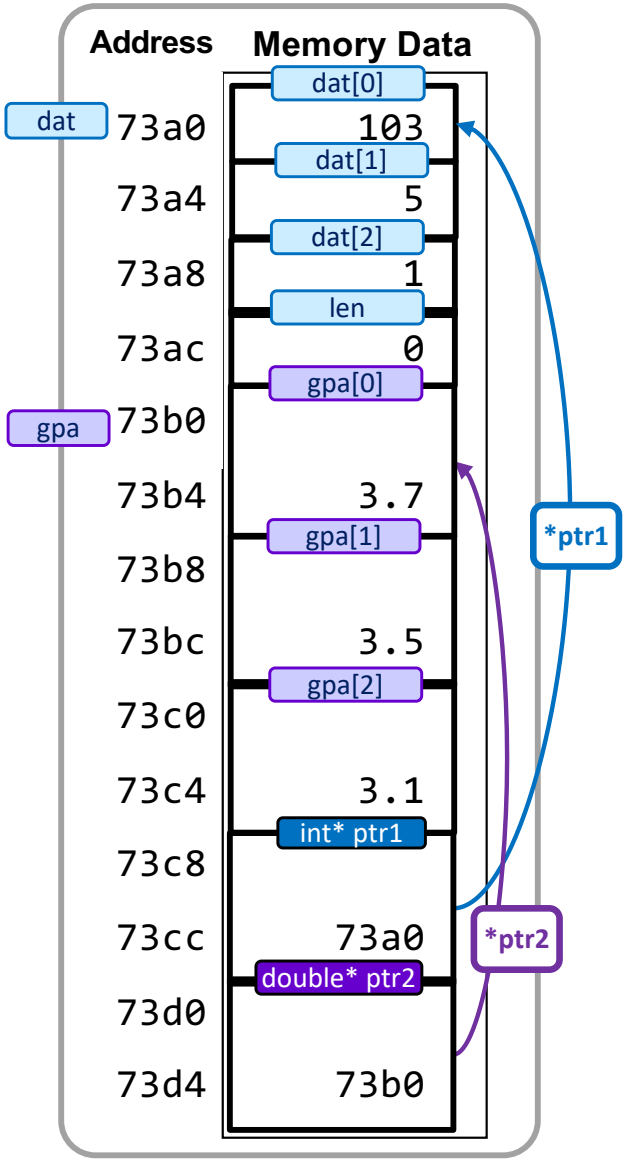

# Pointer Arithmetic Examples

- The number added/subtracted to the pointer is implicitly **scaled** (multiplied) by the size of the **type** pointed to, ensuring the resulting address points to a valid data item

```
int dat[] = {103, 5, 1}
int len=0;
double gpa[3] = {3.7, 3.5, 3.1};
int *ptr1 = dat;
*ptr1 = 104;
ptr1 = ptr1 + 2; // addr. inc. by 2*4 (2*sizeof(int))
(*ptr1)++;  // increment the dereferenced value
ptr1--;     // addr. dec. by 1*4 (1*sizeof(int))
double *ptr2 = gpa;
ptr2 += 2;  // ptr2 addr. + 2*8 (2*sizeof dbl)
*ptr2++ = 4.0;  // set dereferenced value to 4.0 then
                // increment addr. by 1*8 (1*sizeof(double))
// *ptr2 = 2.9;  What if??
```

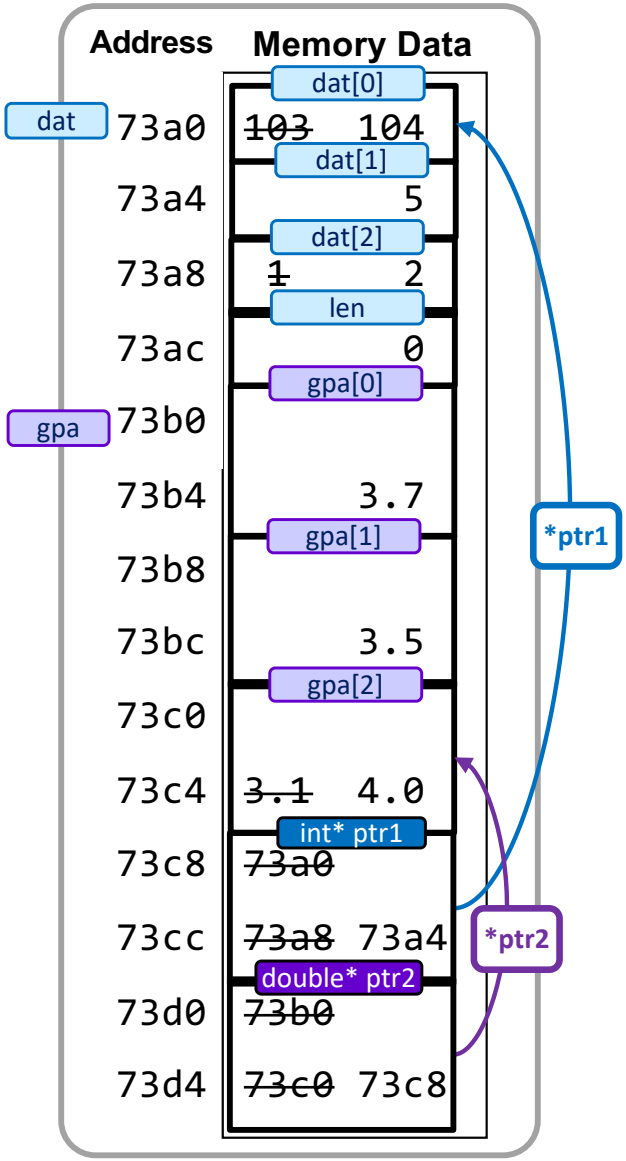

# Pointer Arithmetic and Array Indexing

- **Pointer arithmetic and array indexing are really the same!**
- Array syntax: `data[i]`
  - Says **get** the value of the i-th integer in the data array
- Pointer syntax vs. Array syntax: `*(data + i)  <=>  data[i]`
  - `(data + i)` compute the address of the i-th value in an array and * operator gets its value
- We can use pointers and array names interchangeably (an array name is a pointer and a pointer can be treated as an array name and [ ] applied)
  - `int data[6] = {10, 11, 12, 13, 14, 15};  // data = 73a0;`
  - `*(data + 4) = 50;  // treat data like a pointer and perform data[4] = 50;`
  - `int* ptr = data;  // ptr now points at 73a0 too`
  - `ptr[1] = ptr[2] + ptr[3]; // treat ptr like array name (same as data[1]=data[2]+data[3])`

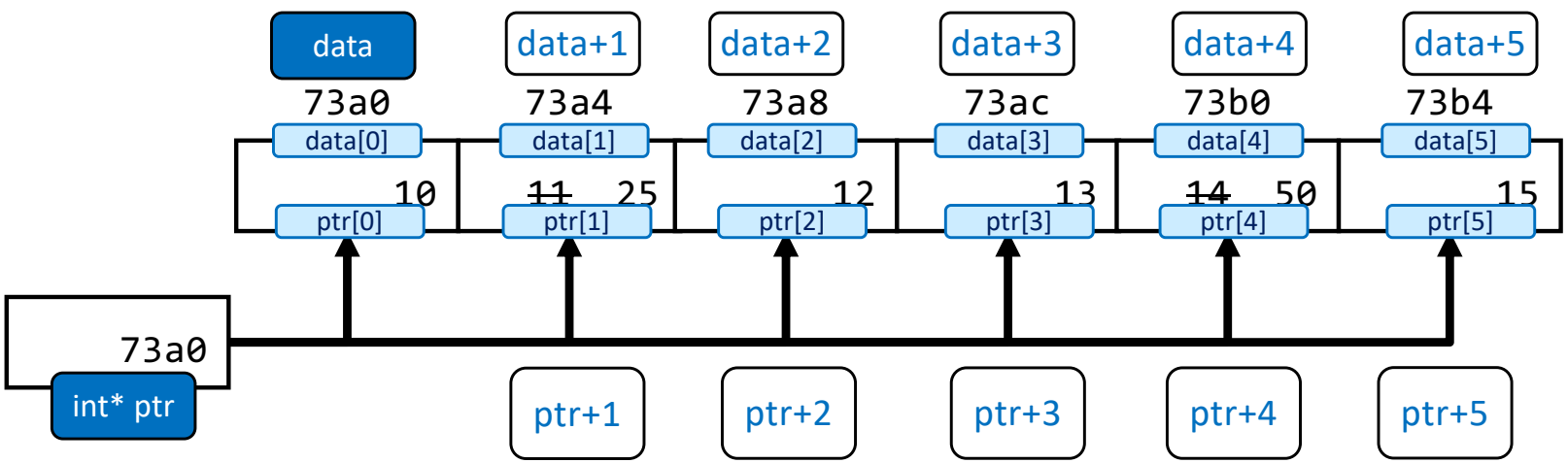

# Arrays vs Pointers

- All 3 methods below perform the same task of initializing the array
  - Which do you prefer?
  - Remember, your goal is to make your code readable (option 1) but you should understand all 3.

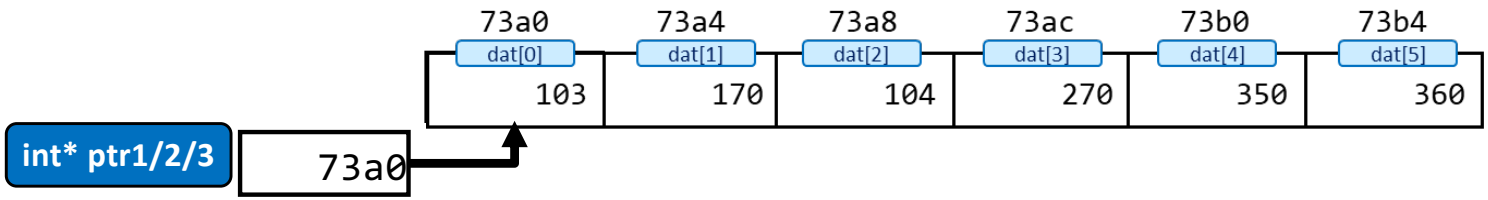


**Common Array Syntax**

```
int main()
{
  int dat[10];
  int *ptr1 = dat;
  // initialize the array
  for(int i=0; i < 10; i++)
  {
     ptr1[i] = 0;
     // equivalent to
     // dat[i] = 0;
  }
  // use the array
}
```

**Explicit pointer arithmetic**

```
int main()
{
  int dat[10];
  int *ptr2 = dat;
  // initialize the array
  for(int i=0; i < 10; i++)
  {
     *(ptr2+i) = 0;
  }
  // use the array
}
```

**"Walking" Pointer**

```
int main()
{
  int dat[10];
  int *ptr3 = dat;
  // initialize the array
  for(int i=0; i < 10; i++)
  {
     *ptr3 = 0;
     ptr3++;
  }
  // use the array
}
```

# Recall: Passing Arrays as Arguments

- In function declaration / prototype for the ***formal*** parameter use
  - type [] or type * to indicate an array is being passed
- When calling the function, simply provide the name of the array as the ***actual*** argument
  - **In C/C++ using an array name without any index evaluates to the starting address of the array (a pointer to the 0th element)**

```
// Function that takes an array
int sum(int data[], int size);
// or int sum(int* data, int size);

int sum(int data[], int size)
// or int sum(int* data, int size)
{                                  7420
  int total = 0;
  for(int i=0; i < size; i++){
    total += data[i];
  }
  return total;
}

int main()
{
  int vals[100];
  /* some code to ini 7420 ize vals */
  int mysum = sum(vals, 100);
  cout << mysum << endl;
     // prints sum of all numbers
  return 0;
}
```

**Recall: To access an element in an array, we need 3 pieces of info:**

1. **Start address of the array**
2. **Index/offset**
3. **Type of elements in the array (really the size of that type)**

# Stack View of Passing Arrays

- Main point: A pointer and an array name are interchangeable!

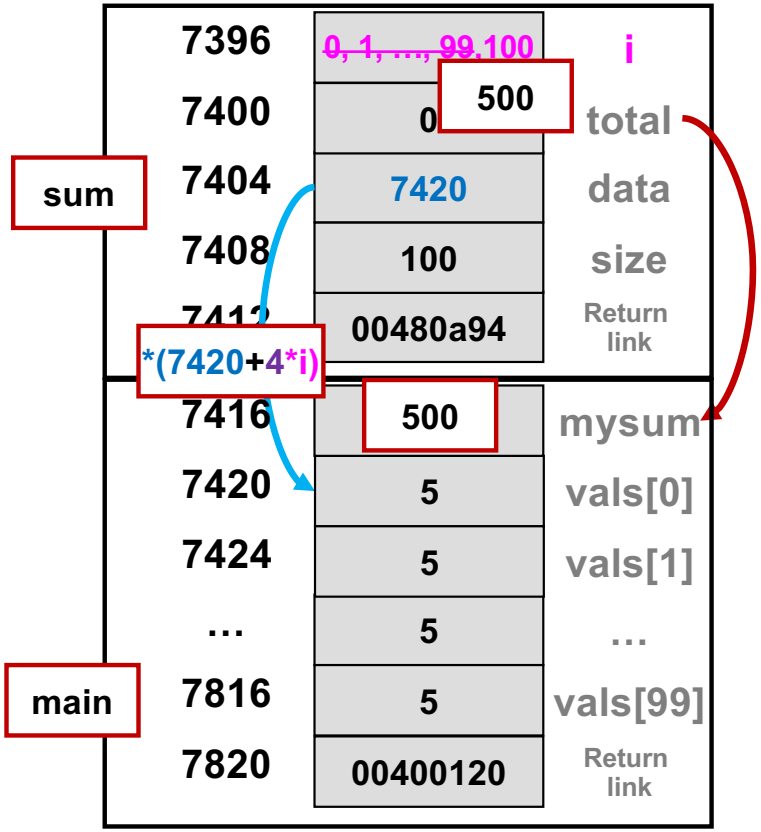


```
// Function that takes an array
int sum(int data[], int size);
// or int sum(int* data, int size);

int sum(int data[], int size)
// or int sum(int* data, int size)
{
  int total = 0;
  for(int i=0; i < size; i++){
    total += data[i]; // *(data+i)
  }
  return total;
}

int main()
{
  int vals[100];
  /* some code to [illegible]ize vals */
  int mysum = sum(vals, 100);
  cout << mysum << endl;
     // prints sum of all numbers
  return 0;
}
```

An int*

# One or Many

- Strange question:
  - Is 3240 McClintock Ave. the address of a single-family house or a large dormitory with many suites?
- We can't know.
- In the same way, C/C++ does not differentiate whether a pointer points to a single variable or an array (i.e. it doesn't have additional syntax)
  - It can only be determined based on how the function uses the pointer (does it treat the pointer as being to an array OR to a single value)
  - Good commenting/documentation should describe this.

```
void f1(int* p)
{  // does p point to one int
   // or an array of ints?

}
```

```
// f1 decrements the integer
//  pointed to by p
void f1(int* p)
{
  *p -= 1;
}
```

Pointer to a single variable

```
// f1 sets the array pointed to
//  by p to all zeros
void f1(int* p)
{
  for(int i=0; i < 10; i++)
   { p[i] = 0; }
}
```

Pointer to an array

# const or non-const

- The const modifier on a variable type means it may not be modified or changed after being initialized
- Why would we want that?
  - Because YOU are your OWN WORST ENEMY when programming! You make mistakes. The more we can enlist the compiler to help us catch mistakes, the better
  - If our intention is for a variable not to change, then declare it const.
- A const pointer means we can dereference the pointer to GET (view) the data but NOT use the pointer to CHANGE (edit) the data
  - Similar to "Can View" vs. "Can Edit" permission on a Google doc.

```
int main() {
  const int size = 5;
  // size cannot be modified
  size = 6;  // Compile Error
}
```

```
void f1(int* p, int size)
{
  for(int i=0; i < size; i++)
   { p[i] = 0; }
}
```

Editor

Non-Const = "Can Edit"

```
void f1(const int* p, int size)
{

  for(int i=0; i < size; i++) {
     cout << p[i] << endl;
     p[i] = 0; // compile error
  }
}
```

Viewer

Const = "Can View"

# Const or Non-Const Example

- Which parameters of the functions should be marked as `const`?
- Does `size` need to be marked const?
  - Would it make sense to try to mark an email attachment as "view only"?
  - No! Since it is already a copy

```
void init(________  int data[], int size)
// or void init(________ int* data, int size)
{
  for(int i=0; i < size; i++){
     cin >> data[i];
  }
}
int sum(________ int data[], int size)
// or int sum(________ int* data, int size)
{
  int total = 0;
  for(int i=0; i < size; i++){
    total += data[i]; // *(data+i)
  }
  return total;
}

int main()
{
  int vals[100];
  init(vals, 100);
  int mysum = sum(vals, 100);
  cout << mysum << endl;
     // prints sum of all numbers
  return 0;
}
```

An int*

# C (not C++) String Function/Library (#include <cstring>)

- A library of functions was provided to perform operations on these character arrays representing strings ( `<cstring>` in C++, `<string.h>` in C)
  - `int strlen(const char *dest) / int strlen(const char dest[])`
  - `int strcmp(const char *str1, const char *str2);`
    - Return 0 if equal, >0 if first non-equal char in str1 is alphanumerically larger, <0 otherwise
  - `char *strcpy(char *dest, const char *src);`
  - `char *strcat(char *dest, const char *src);`
    - Concatenates src to the end of dest
  - `char *strchr(const char *str, char c);`
    - Finds first occurrence of character 'c' in str returning a pointer to that character or NULL if the character is not found