Unit 4

Microcontrollers (Arduino) Overview

Digital I/O

ARDUINO BOARD INTRO

Arduino Uno Intro

- The Arduino Uno is a microcomputer development board based on the **Atmel ATmega328P 8-bit processor**.
- Most microcomputer manufacturers (Atmel, Freescale, etc.) produce small circuit boards with connectors for other sensors, actuators, etc. that engineers can use to prototype systems before integrating all the components in a system
- The *software* running on the ATmega processor can sense or produce voltages on the **connector pins** to control the connected *hardware* devices

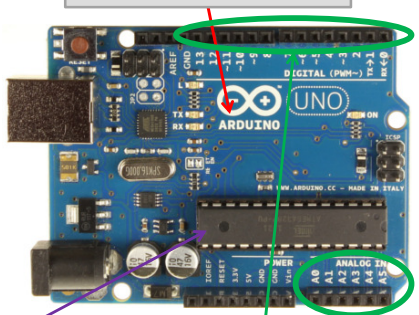

http://arduino.cc/en/Main/ArduinoBoardUno

Arduino Uno

- Arduino
  - An Italian company which produces the printed circuit boards that integrate processor, power sources, USB connector, etc.
  - Hardware and software are open source.
  - Very popular with hobbyists and engineers, due in a large part to their low cost.

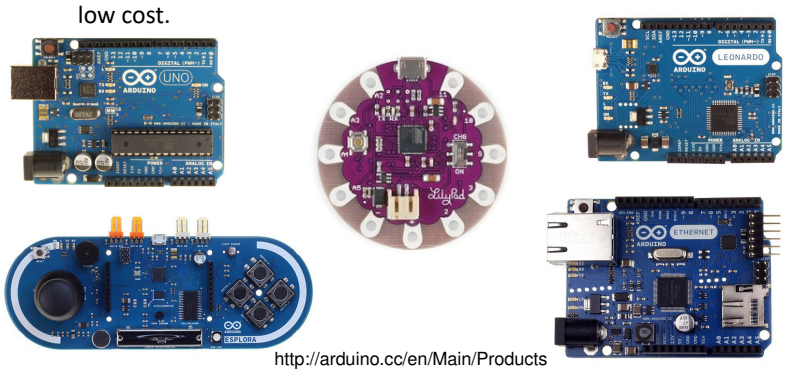

http://arduino.cc/en/Main/Products

Arduino Uno

- What's on an Arduino Uno board?

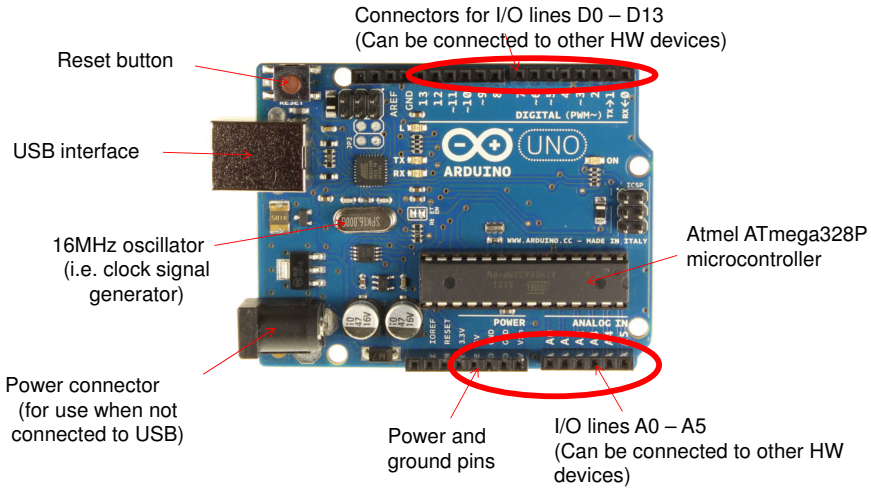

Arduino Uno

- Arduino Unos can be stacked with "shield" boards to add additional capabilities (Ethernet, wireless, D/A, LCDs, sensors, motor control, etc.)

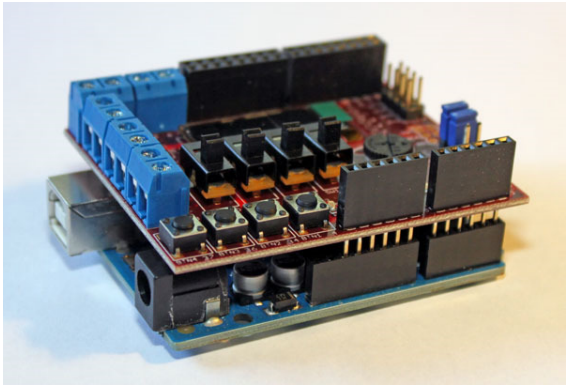

Arduino IDE

- Arduino provides an Integrated Development Environment (IDE) with libraries of code to simplify use of integrated or connected hardware devices
- Our goal is for you to learn how to write that code from scratch and how to develop firmware, hardware device drivers, etc.
  - Thus, we will not use the IDE but the base compiler: `avr-gcc`

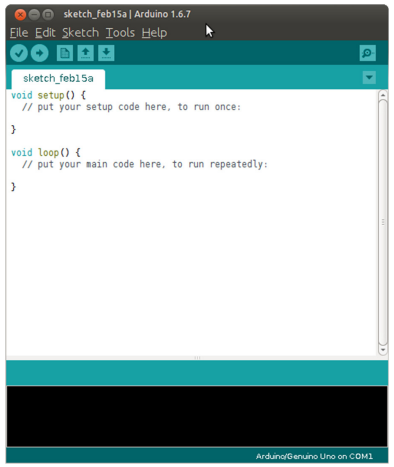

Flashback to Week 1

- Recall the computer interacts with any input or output (I/O) device by simply doing reads/writes to the memory locations (often called registers) in the I/O interfaces…
- The Arduino has many of these I/O interfaces all connected via the data bus

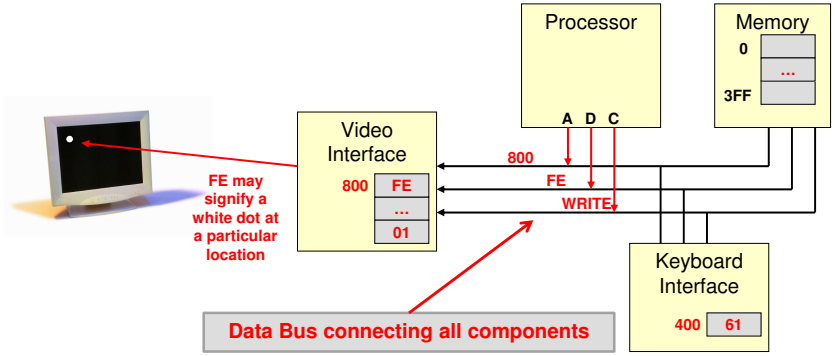

Atmel ATmega328P

- The Arduino Uno is based on an Atmel ATmega328P 8-bit microcontroller, which has many useful hardware devices integrated with the processor
  - 32kb of FLASH ROM
  - _____ bytes of RAM
  - 3 timer/counters
  - Serial/SPI/I^{2}C interfaces
  - A/D converter
  - ____ I/O lines for connecting other custom components

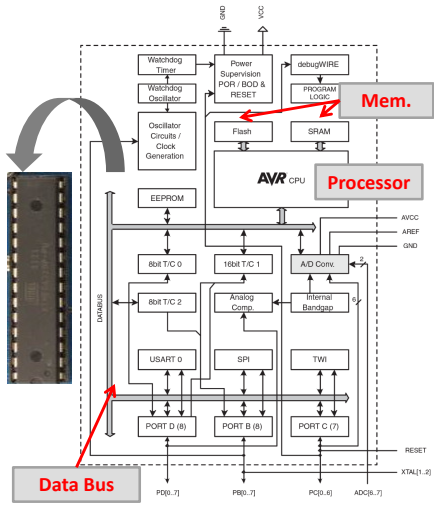

Arduino Digital I/O

- ATmega328P has 23 pins on the chip that can be connected to other devices (switches, LEDs, motors, etc.)
  - Other members of the ATmega family may have more or less lines.
  - The Arduino Uno can make use of ***only*** ___ of these lines.
- Each pin can be used as a digital input or a digital output
  - **For output pins:** Your code determines what value ('1' or '0') appears on the pin and can connect to another component
  - **For input pins:** Your code senses/reads what value another device is putting on the pin
  - A pin can be used as an output on one project and an input on a different project (_____ via software)

Main Point: Individual pins on the Arduino can be used as inputs OR outputs

Groups (Ports) B, C and D

- The Arduino provides 20 separate digital input/output bits that we can use to interface to external devices
- Recall computers don't access individual bits but instead the byte (8-bits) is the smallest unit of access
- Thus to deal with our digital inputs we will put the bits into **3 groups**: Group B, C, and D
  - We often refer to these groups as "_____" but you'll see that "port" is used in multiple places so we'll generally use "group"

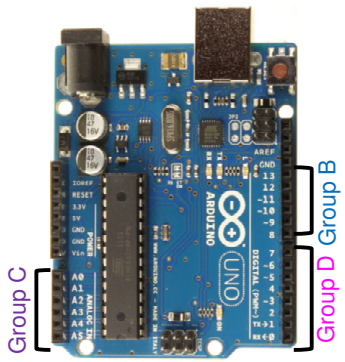

Software to Arduino Name Mapping
Group B bit5-bit0 = DIG13-DIG8
Group C bit5-bit0 = A5-A0
Group D bit7-bit0 = DIG7-DIG0

Arduino Port/Pin Mapping

- Since computers usually deal with groups of 8-bits (a.k.a. a byte), all of the 20 I/O pins are split into **three 8-bit I/O groups (B, C and D)**
  - The avr-gcc software (SW) and the Arduino hardware (and software IDE) use different names to refer to the bits within each port

SW	Arduino	SW	Arduino	SW	Arduino
PortB, bit0	DIG8	PortC, bit0	AN0	PortD, bit0	DIG0
PortB, bit1	DIG9	PortC, bit1	AN1	PortD, bit1	DIG1
PortB, bit2	DIG10	PortC, bit2	AN2	PortD, bit2	DIG2
PortB, bit3	DIG11	PortC, bit3	AN3	PortD, bit3	DIG3
PortB, bit4	DIG12	PortC, bit4	AN4	PortD, bit4	DIG4
PortB, bit5	DIG13	PortC, bit5	AN5	PortD, bit5	DIG5
PortB, bit6	Clock1 (don't use)	PortC, bit6	Reset (don't use)	PortD, bit6	DIG6
PortB, bit7	Clock2 (don't use)			PortD, bit7	DIG7

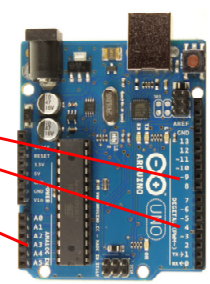

Main Point: Each pin has a name the software uses (Portx) and a name used on the Arduino circuit board (Anx or DIGx)

Using Ports to Interface to HW

- The I/O groups (aka ports) are the intermediaries between your software program and the physical devices connected to the chip.
- Your program is responsible for managing these ports (groups of I/O pins) in order to make things happen on the outside

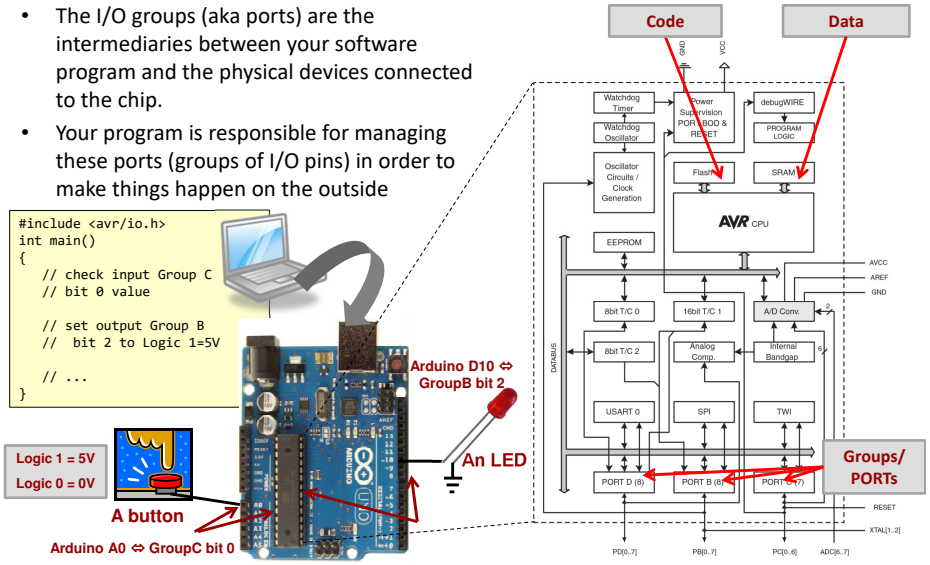

Using software to perform logic on individual (or groups) of bits

BIT FIDDLING

Bit-Fiddling Introduction

- The primary way that software (device drivers, firmware, etc.) controls hardware is by manipulating _____ bits in certain hardware **registers** (memory locations)
- Thus, we need to learn how to:
  - Set a bit to a 1
  - Clear a bit to a 0
  - Check the value of a given bit (is it 0 or 1)
- Because computers do not access anything smaller than a _____ (8-bits) we must use logic operations to manipulate individual bits within a byte
  - These bit manipulations are often referred to as **bit fiddling**

Numbers in Other Bases in C/C++

- Suppose we want to place the binary value 00111010 into a char variable, v [i.e. `char v;`]
  - We could convert to decimal on our own (58_{10})
    v = 58;
  - All compilers support hexadecimal using the ___ prefix
    v = 0x3a;
  - Our Arduino compiler supports binary using the ___ prefix
    v = 0b00111010;
- Important note: Compilers convert EVERYTHING to equivalent _____. The 3 alternatives above are equivalent because the compiler will take all 3 and place 00111010 in memory.
  - Use whichever base makes the most sense in any given situation
  - ***It is your (the programmer's)*** _____…the compiler will end up converting to binary once it is compiled

Modifying Individual Bits

- Suppose we want to change only a single bit (or a few bits) in a variable [i.e. `char v;`] without changing the other bits
  - Set the LSB of v to 1 w/o affecting other bits
    - Would this work? `v = 1;`
  - Set the upper 4 bits of v to 1111 w/o affecting other bits
    - Would this work? `v = 0xf0;`
  - Clear the lower 2 bits of v to 00 w/o affecting other bits
    - Would this work? `v = 0;`
  - ____!!! Assignment changes _____ bits in a variable
- Because the smallest unit of data in computers is usually a byte, manipulating individual bits requires us to use **BITWISE OPERATIONS.**
  - Use _____ operations to clear individual bits to 0
  - Use _____ operations to set individual bits to 1
  - Use _____ operations to invert bits
  - Use AND to check a bit(s) value in a register

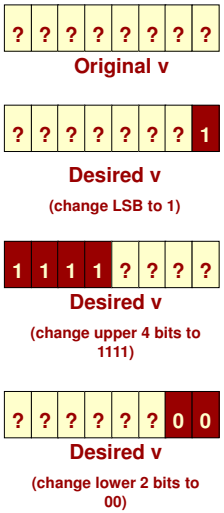

Using Logic to Change Bits

- ANDs can be used to control whether a bit passes unchanged or results in a __
- ORs can be used to control whether a bit passes unchanged or results in a __
- XORs can be used to control whether a bit passes unchanged or is inverted

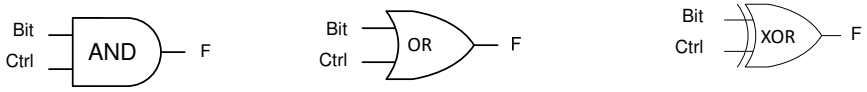

Ctrl	Bit	F	
0	0	0	Force '0'
0	1	0	
1	0	0	Pass
1	1	1	

0 AND x = __
1 AND x = __
x AND x = __

Ctrl	Bit	F	
0	0	0	Pass
0	1	1	
1	0	1	Force '1'
1	1	1	

0 OR x = __
1 OR x = __
x OR x = __

Ctrl	Bit	F	
0	0	0	Pass
0	1	1	
1	0	1	Invert
1	1	0	

0 XOR x = __
1 XOR x = __
x XOR x = __

You already knew the above ideas. It is just T1-T3.

T1	**X + 0 = X**	**T1'**	**X • 1 = X**
T2	**X + 1 = 1**	**T2'**	**X • 0 = 0**
T3	**X + X = X**	**T3'**	**X • X = X**

Bitwise Operations

- The C AND, OR, XOR, NOT bitwise operations perform the operation on each pair of bits of 2 numbers

```
    0xF0  →      1111 0000
AND 0x3C        AND 0011 1100
          ←

    0xF0  →      1111 0000
OR  0x3C         OR 0011 1100
          ←

    0xF0  →      1111 0000
XOR 0x3C        XOR 0011 1100
          ←

NOT 0xF0  →     NOT 1111 0000
          ←
```

```c
#include <stdio.h> // C-Library
                   // for printf()

int main()
{
  char a = 0xf0;
  char b = 0x3c;

  printf("a & b = %x\n", a & b);
  printf("a | b = %x\n", a | b);
  printf("a ^ b = %x\n", a ^ b);
  printf("~a = %x\n", ~a);
  return 0;
}
```

C bitwise operators:
& = AND
| = OR
^ = XOR
~ = NOT

Bitwise Operations & Masking

- Bitwise operations are often used for "bit fiddling"
  - Change the value of a bit in a register w/o affecting other bits
- Determine appropriate _____ bit patterns (aka _____) that will change some bits while leaving others _____
  - Masks can be written in binary, hex, or even decimal (it is the programmer's _____...whatever is easiest)
- Examples (Assume an 8-bit variable, v)
  - Clear the LSB to '0' w/o affecting other bits
    - v = v & ___; **or equivalently**
    - v = v & ____;
  - Set the MSB to '1' w/o affecting other bits
    - v = v | ____;
  - Flip the LS 4-bits w/o affecting other bits
    - v = v ^ _____;

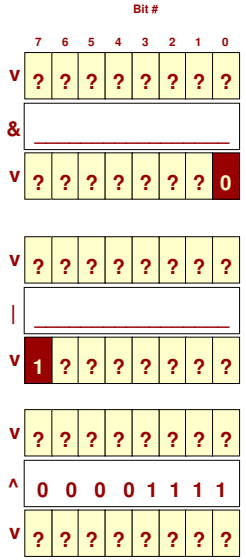

Changing Register Bits

- Some practice problems:
  - Set bit 0 of v to a '1'
    `v = v _ ____;`
  - Clear the 4 upper bits in v to '0's
    `v = v _ ____;`
  - Flip bits 4 and 5 in v
    `v = v _ _____;`

	7	6	5	4	3	2	1	0
v	?	?	?	?	?	?	?	?
|	_____							
v	?	?	?	?	?	?	?	?
&	_____							
v	?	?	?	?	?	?	?	?
^	_____							

Note: It is the programmer's choice of writing the "mask" constant in binary, hex, or decimal. However, hex is usually preferable (avoids mistakes of missing a bit in binary and easier than converting to decimal).

Checking Register Bits

- To check for a given set of bits we use a bitwise-AND to isolate just those bits
  - The result will then have 0's in the bit locations not of interest
  - The result will keep the bit values of interest
- Examples
  - Check if bit 7 of v = '1'
    `if ( (v & 0x80) == 0x80) { code }` **or**
    `if (_____) { code }`
  - Check if bit 2 of v = '0'
    `if ( (v & 0x04) == 0x00) { code }` **or**
    `if ( _____ ) { code }`
  - Check if bit 2:0 of v = "101"
    `if ( (v & 0b00000111) == 0b00000101) {..}`
  - Check if bit 5-4 of v = "01"
    `if ( (v & 0x30) == 0x10) { code }`

	7	6	5	4	3	2	1	0
v	?	?	?	?	?	?	?	?
&	1	0	0	0	0	0	0	0
v	?	?	?	?	?	?	?	?
&	0	0	0	0	0	1	0	0
v	?	?	?	?	?	?	?	?
&	0	0	0	0	0	1	1	1
v	?	?	?	?	?	?	?	?
&	0	0	1	1	0	0	0	0

Short Notation for Operations

- In C, assignment statements of the form
  `x = x op y;`
- Can be shortened to
  `x op= y;`
- Example:
  `x = x + 1;` can be written as `x += 1;`
- The preceding operations can be written as
  `v|= 0x01;`
  `v &= 0x0f;`
  `v ^= 0b00110000;`

Logical vs. Bitwise Operations

- The C language has two types of logic operations
  - Logical and Bitwise
- Logical Operators (&&, ||, !)
  - Operate on the logical value of a FULL variable (char, int, etc.) interpreting that value as either True (non-zero) or False (zero)
  - `char x = 1, y = 2, z = x && y;`
    - Result is z = _____; Why?
  - `char x = 1;`
    `if(!x) { /* will NOT execute since !x = _____ */ }`

```
  0000 0001=__
&& 0000 0010=__
```

```
! 0000 0001=
```

- Bitwise Operators (&, |, ^, ~)
  - Operate on the logical value of INDIVIDUAL bits in a variable
  - `char x = 1, y = 2, z = x & y;`
    - Result is z = _____; Why?
  - `char x = 1;`
    `if(~x) { /* will execute since ~x = _____ */ }`

```
  0000 0001
& 0000 0010
```

```
~ 0000 0001
```

Controlling the pins of the Arduino to be digital inputs and outputs

ARDUINO DIGITAL I/O

Overview

- In the next few slides you will learn
  - What your software needs to do to setup the pins for use as digital inputs and/or outputs
  - To set bits (to 1) and clear bits (to 0) using bitwise operations (AND, OR, NOT) to control individual I/O pins
  - How to do it in a readable syntax using shift operators (<<, >>)
- Don't be worried if it doesn't make sense the first time…listen, try to make sense of it, and ask a lot of questions.

```
#include <avr/io.h>
int main()
{
   // check input Group C
   // bit 0 value

   // set output Group B
   //  bit 2 to Logic 1=5V

   // ...
}
```

What is the actual code we would write to accomplish these tasks?

We'll answer that through the next few slides.

Controlling I/O Groups/Ports

- Each group (B, C, and D) has **3** registers in the µC associated with it that control the operation
  - Each bit in the register controls something about the corresponding I/O bit.
  - _____ (DDRB, DDRC, DDRD)
  - _____ (PORTB, PORTC, PORTD)
  - _____ (PINB, PINC, PIND)
- You'll write a program that sets these bits to 1's or 0's as necessary

What you store in the register bits below affect how the pins on the chip operates

DDRD

DDRD7	DDRD6	DDRD5	DDRD4	DDRD3	DDRD2	DDRD1	DDRD0

DDRB

		DDRB5	DDRB4	DDRB3	DDRB2	DDRB1	DDRB0

PORTD

PORT D7	PORT D6	PORT D5	PORT D4	PORT D3	PORT D2	PORT D1	PORT D0

PORTB

		PORT B5	PORT B4	PORT B3	PORT D2	PORT D1	PORT D0

PIND

PIND7	PIND6	PIND5	PIND4	PIND3	PIND2	PIND1	PIND0

PINB

		PINB5	PINB4	PINB3	PIND2	PIND1	PIND0

USED TO CONTROL GROUP D

USED TO CONTROL GROUP B

Register 1: Data Direction Register

- DDRx (Data direction register) [x=B,C,D…DDRB, DDRC, DDRD]
  - Controls whether pins on the chip act as inputs or outputs.
  - Example: If DDRB5 = __ -> Group B bit 5 = DIG13 pin) will be used as an _____
  - Example: If DDRB5 = __ -> Group B bit 5) will be used as an _____
  - All I/O lines start out as inputs when the µC is reset or powered up.

DDRD

DDRD7	DDRD6	DDRD5	DDRD4	DDRD3	DDRD2	DDRD1	DDRD0
0	0	0	0	1	1	1	1

PD[7:4] = INPUT **PD[3:0] = OUTPUT**

DDRB

		DDRB5	DDRB4	DDRB3	DDRB2	DDRB1	DDRB0
		1	0	0	0	0	0

PB[5] = OUTPUT **PB[4:0] = INPUT**

SW	Arduino	SW	Arduino	SW	Arduino
PortB, bit0	DIG8	PortC, bit0	AN0	PortD, bit0	DIG0
PortB, bit1	DIG9	PortC, bit1	AN1	PortD, bit1	DIG1
PortB, bit2	DIG10	PortC, bit2	AN2	PortD, bit2	DIG2
PortB, bit3	DIG11	PortC, bit3	AN3	PortD, bit3	DIG3
PortB, bit4	DIG12	PortC, bit4	AN4	PortD, bit4	DIG4
PortB, bit5	DIG13	PortC, bit5	AN5	PortD, bit5	DIG5
PortB, bit6	Clock1 (don't use)	PortC, bit6	Reset (don't use)	PortD, bit6	DIG6
PortB, bit7	Clock2 (don't use)			PortD, bit7	DIG7

Notation: [7:4] means bit7-bit4 and is shorthand, not C code. Don't use it in your programs.

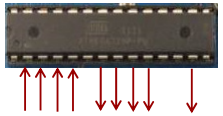

PD[7:4] PD[3:0] PB[5]

Consider a leaf BLOWER / VACCUM.

There must be a switch to select if you want it to blow (output) or produce suction (input)…DDR register is that "switch"

http://www.toro.com/en-us/homeowner/yard-tools/blowers-vacs/pages/series.aspx?sid=gasblowervacsseries

Register 2: PORT (Pin-Output) Register

- PORTxn (Primarily used if group x, bit n is configured as an output)
  - When a pin is used as an output (DDRxn = 1), the corresponding bit in PORTxn determines the value/voltage of that pin.
  - E.g. By placing a '1' in PORTB5, pin 5 of group B will output a _____

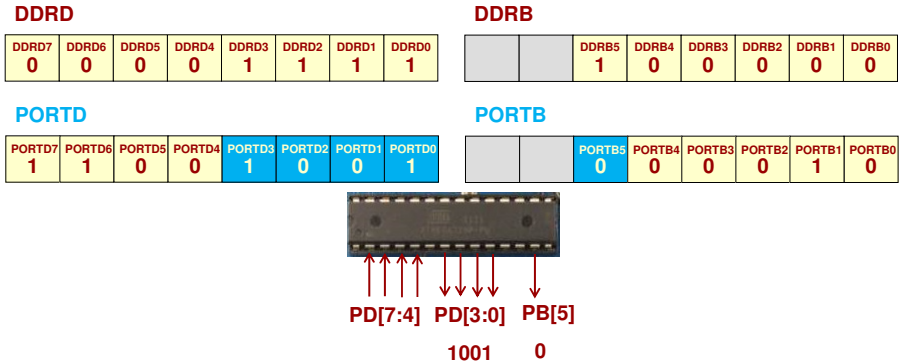

Main Point: For pins configured as outputs, the values you put in the PORT register will be the output voltages

Microcontroller Digital I/O Schematic 1

- DDR bit = 1 connects PORT register bit to I/O pin (i.e. output)
- DDR bit = 0 connects I/O pin to microprocessor (i.e. input)
- See next slide for illustrations of these 2 cases

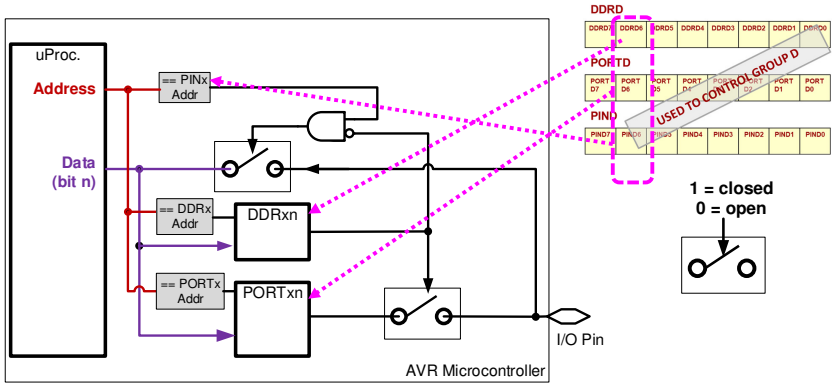

Microcontroller Digital I/O Schematic 2

- Port bit value controls WHAT voltage is output to the I/O pin

DDR bit = 1, Port bit = 1

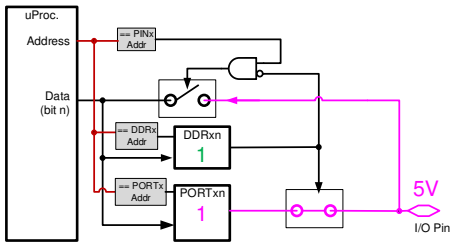

DDR bit = 1, Port bit = 0

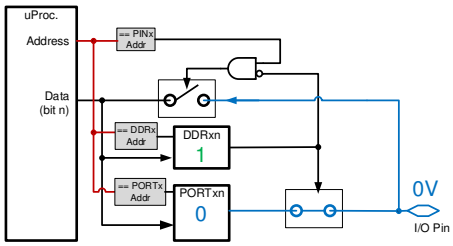

Register 3: PIN (Pin-Input) Register

- PINxn (Used if the group x, bit n is configured as an input)
  - When a bit is an input (DDRxn=___), reading bit n from the register PINx reflects the current value at the corresponding input pin
- The program doesn't have to do anything special to read the digital signals into the PIN register, just use the register name
  - `if(PIND == 0x00)` // check if all the signals coming into port D are 0's
  - `char val = PINB;` // read and save all 8 signals coming into port B in a variable 'val'.
  - Referencing PINx produces a _____ (at the instant the line of code is execute) of the bit values coming in those 8 pins; it does not constantly _____ the input bits
- Programs must read the _____ bits in the PIN register, but can then use bitwise logical operations to check individual bits

Main Point: For pins configured as inputs, referencing the PINx register samples the input voltages at all the pins

Microcontroller Digital I/O Schematic 3

- Reading from PIN "register" allows voltage at input pin to be sent to the microprocessor

DDR bit = 0, External Input = 1

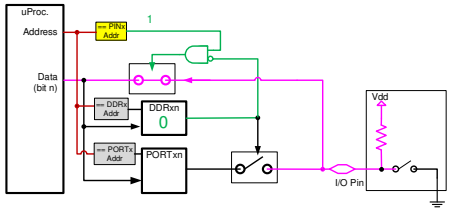

DDR bit = 0, External Input = 0

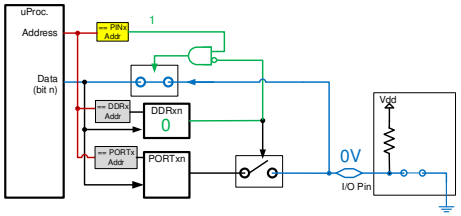

Review of Accessing Control Registers in C

- Control registers have names and act just like variables in a C program
- To put values into a control register you can assign to them like any C variable or perform bitwise operations
  - DDRD = 0xff; // 0b11111111 or 255
  - DDRB = 255;
  - PORTD |= 0xc0; // 0b11000000 or 192
  - PORTD |= 0b01110000;
- To read the value of a control register you can write expressions with them
  - unsigned char myvar = PIND; // grabs all 8-inputs on the port D
  - myvar = PINB & 0x0f; // grabs the lower 4 inputs

Practice: Changing Register Bits

- Use your knowledge of the bitwise operations to change the values of individual bits in registers without affecting the other bits in the register.
  - Set DDRB, bit 3 to a '1'
    DDRB |= 0b_____; // DDRB |= 0x___;
  - Clear the 2 upper bits in PORTD to '0's
    PORTD &= 0x____;
    // PORTD &= ~(0b11000000)
  - Flip bits 7 and 1 in DDRD
    DDRD ^= 0b_____; // DDRD ^= 0x____;
  - Check if PINC, bit 4 = '1'
    if (PINC & 0x10) { code }

DDRB	?	?	?	?	?	?	?	?
|	_____							
PORTD	?	?	?	?	?	?	?	?
&	_____							
DDRD	?	?	?	?	?	?	?	?
^	_____							
PINC	?	?	?	?	?	?	?	?
&	_____							

EXAMPLES

LED Outputs Review

- Recall we can connect LEDs to the outputs of a digital signal
  - The digital output value that will turn the LED on varies based on how we wire the LED
- Be sure to use a current-limiting resistor (few hundred ohms ~200-500 ohms)

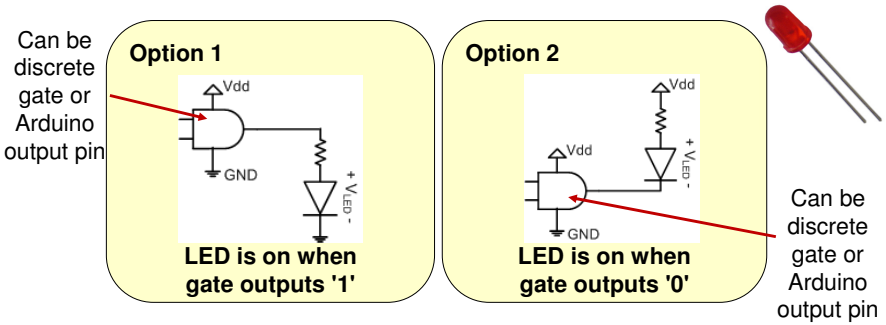

Switch & Button Input Review

- Recall: Switches/buttons alone do not produce 1's and 0's; they must be connected to voltage sources
- Preferred connection:
  - Connect one side of switch to GND (ground)
  - Connect other side of switch to digital input AND to a pull-up resistor (around 10Kohms) whose other side is connected to Vdd
- Switch/button will produce a:
  - 0 when pressed
  - 1 when open (not-pressed)

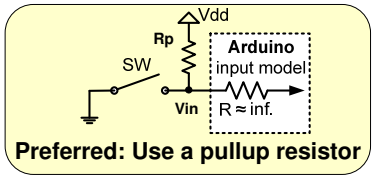

Main Point: Buttons & switches should have GND connected to one side & a pull-up resistor on the other

Blinking an LED

- Hardware and software to make an LED connected to D7 blink

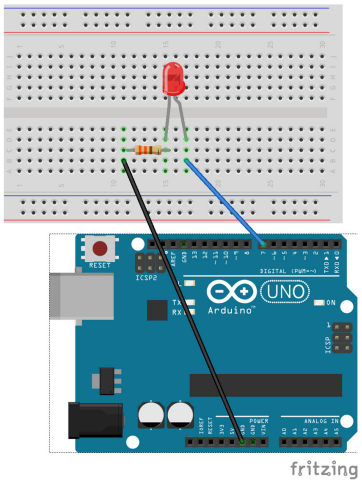


```
#include <avr/io.h>
#include <util/delay.h>

int main()
{
   // Init. D7 to output
   DDRD |= 0x_____;

   // Repeat forever
   while(1){
      // PD7 = 1 (LED on)
      PORTD |= 0x____;
      _delay_ms(500);

      // PD7 = 0 (LED off)
      PORTD &= _______;
      _delay_ms(500);
   }
   // Never reached
   return 0;
}
```

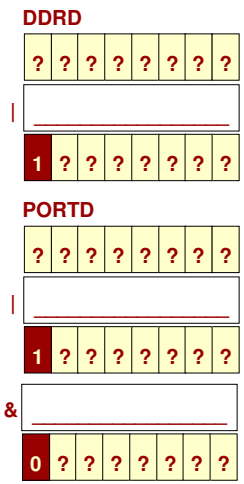

Turning an LED on/off with PB

- Hardware to turn an LED connected to D7 on/off when pressing a pushbutton connected to D4

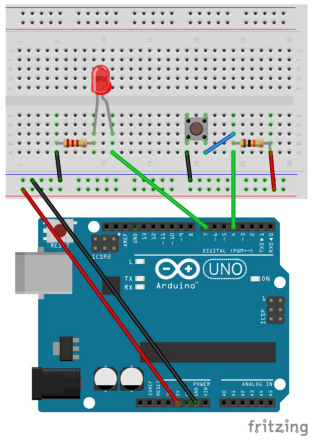

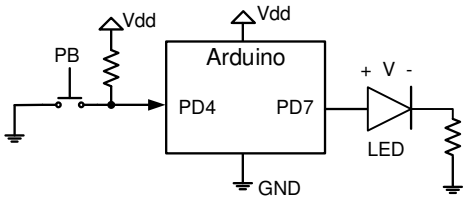

Turning on an LED from a Button

- Note: When the button is pressed a __ is produced at the PD4 input

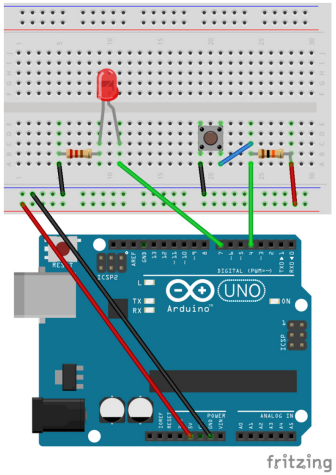


```
#include <avr/io.h>

int main()
{
   // Init. D7 to output
   DDRD |= 0x80;
   // All pins start as input
   // on reset, so no need to
   // clear DDRD bit 4

   // Repeat forever
   while(1){
      // Is PD4 pressed?
      if( (PIND _______) == 0){
       // PD7 = 1 (LED on)
       PORTD |= 0x80;
      }
      else {
       // PD7 = 0 (LED off)
       PORTD &= ~(0x80);
      }
   }
   // Never reached
   return 0;
}
```

DDRD (starts at 0's on reset)

0	0	0	0	0	0	0	0
				_____			
1	?	?	0	?	?	?	?

PIND

?	?	?	?	?	?	?	?
				_____			
0	0	0	?	0	0	0	0

Pull Up Resistors

- Adding and wiring pull-up resistors for input buttons can be time consuming…
- Thankfully, each Arduino input bit has an optional _____ "pull-up resistor" associated with it.
  - If the pull-up is enabled, in the absence of an input signal, the input bit will be "pulled" up to a logical one.
  - The pull-up has no effect on the input if an active signal is attached.

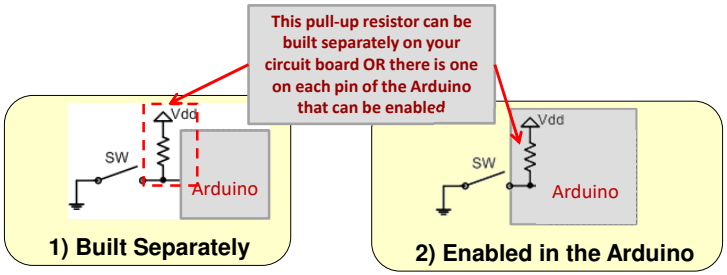

Enabling Pull Up Resistors

- When DDRx bit n is '0' (i.e. a pin is used as input), the value in the _____ registers determines whether the internal pull-up is enabled
  - Remember, the PORT register is normally used when a pin is an output, but here its value helps enable the internal pull-up resistor

A pin being used as an input (DDR bits = __) whose corresponding PORT bit = __ will enable the pull up resistors on the PIN bit

DDRD

DDD7	DDD6	DDD5	DDD4	DDD3	DDD2	DDD1	DDD0
0	0	0	0	1	1	1	1
Inputs				Outputs			

PORTD

PORTD7	PORTD6	PORTD5	PORTD4	PORTD3	PORTD2	PORTD1	PORTD0
1	1	1	1	0	0	1	1
Enable Pull-Up Resistors				Actual output values from PD3-0			

PIND

PIND7	PIND6	PIND5	PIND4	PIND3	PIND2	PIND1	PIND0
0	1	1	0	?	?	?	?
Made-up values read from the push-buttons (which don't require you to wire up external pull-up resistors)							

PD[7:4] (connected to buttons) **PD[3:0]** **0011**

Microcontroller Digital I/O Schematic 4

- Reading from PIN "register" allows voltage at input pin to be sent to the microprocessor

DDR bit = 0, Port bit = 0
No internal pull-up (must use external pull-up)

DDR bit = 0, Port bit = 1
Internal Pull-up

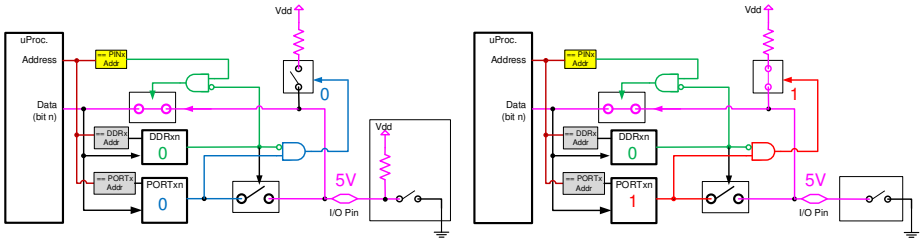

Using Internal Pull-up Resistors

- Let's simplify our wiring and use the internal pull-up resistors

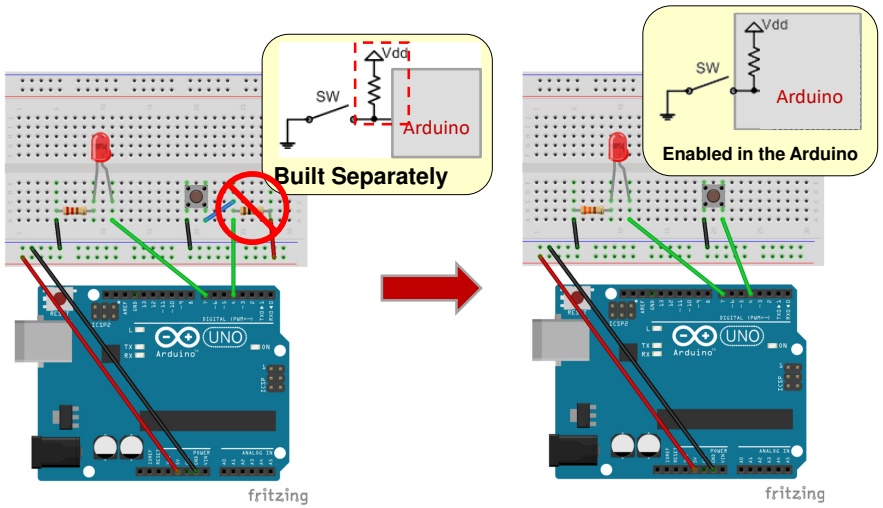

Turning on an LED from a Button

- Note: When the button is pressed a '0' is produced at the PD4 input

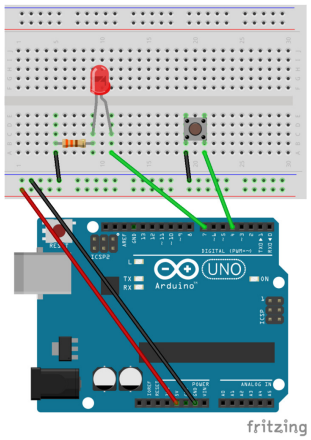


```
#include <avr/io.h>

int main()
{
   // Init. D7 to output
   DDRD |= 0x80;

   // Enable pull-up on PD4
   ______________________;

   // Repeat forever
   while(1){
      // Is PD4 pressed?
      if( (PIND & 0x10) == 0){
       // PD7 = 1 (LED on)
       PORTD |= 0x80;
      }
      else {
       // PD7 = 0 (LED off)
       PORTD &= ~(0x80);
      }
   }
   // Never reached
   return 0;
}
```

DDRD (starts at 0's on reset)

0	0	0	0	0	0	0	0
1	?	?	0	?	?	?	?

PORTD

?	?	?	?	?	?	?	?
?	?	?	1	?	?	?	?

Using "good" syntax/style when performing logic operations

FIDDLING WITH STYLE!

Code Read-ability Tip #1

- Try to replace hex and binary constants with shifted constants

```
#include<avr/io.h>

int main()
{
   // Init. D7 to output
   DDRD |= 0x80;

   // Enable pull-up on PD4
   PORTD |= 0x10;

   // Repeat forever
   while(1){
      // Is PD4 pressed?
      if( (PIND & 0x10) == 0){
       // PD7 = 1 (LED on)
       PORTD |= 0x80;
      }
      else {
       // PD7 = 0 (LED off)
       PORTD &= ~(0x80);
      }
   }
   // Never reached
   return 0;
}
```

```
#include<avr/io.h>

int main()
{
   // Init. D7 to output
   DDRD |= (1 << 7);

   // Enable pull-up on PD4
   PORTD |= (1 << 4);

   // Repeat forever
   while(1){
      // Is PD4 pressed?
      if( (PIND & (1 << 4)) == 0){
       // PD7 = 1 (LED on)
       PORTD |= (1 << 7);
      }
      else {
       // PD7 = 0 (LED off)
       PORTD &= ~(1 << 7);
      }
   }
   // Never reached
   return 0;
}
```

This syntax tells us we are putting a '1' in bit 7 or bit 4…

We will teach you what all this means in the next slides…

Shift Operations

- In C, operators '<<' and '>>' are the shift operators
  - << = _____ shift
  - >> = _____ shift
- Format: data << bit_places_to_shift_by
- Bits shifted out and dropped on one side
- Usually (but not always) 0's are shifted in on the other side

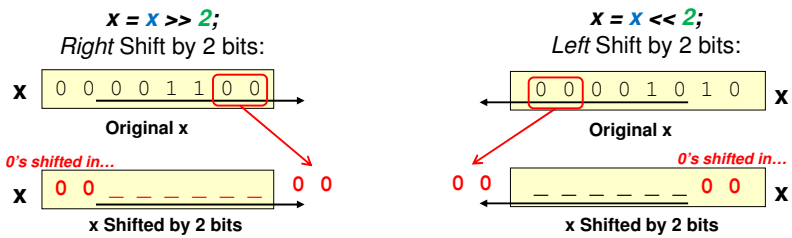

Another Example

- To get a 1 in a particular bit location it is easier to shift the constant 1 some number of places than try to think of the hex or binary constant

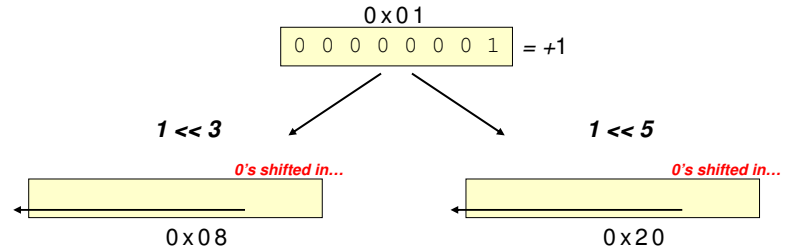

Suppose we want a 1 in bit location 3. Just take the value 1 and shift it 3 spots to the left

Suppose we want a 1 in bit location 5. Shift 1 5 spots to the left. Easier than coming up with 0x20…

Putting it All Together

- Values for working with bits can be made using the '<<' shift operator
  - OK: PORTB |= 0x20; Better: PORTB |= (1 << 5) ;
  - OK: DDRD |= 0x04; Better: DDRD |= (1 << 2);
- This makes the code more readable and your intention easier to understand…
- More examples
  - Set DDRC, bit 5: DDRC |= (1 << 5)
  - Invert PORTB, bit 2: PORTB ^= (1 << 2)
  - Clear PORTD, bit 3: PORTD &= (1 << 3)
    - WRONG! Why?
  - Clear PORTD, bit 3: PORTD &= (0 << 3)
    - WRONG! Why?
  - Clear PORTD, bit 3: PORTD &= ~(1 << 3)
    - RIGHT! Why?

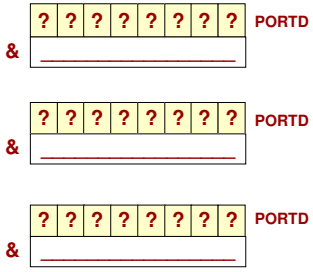

Clearing Bits…A Common Mistake

- When using the '&=' operation to clear bits, remember to invert the bits.
- This won't work to clear 3 to '0'
  - PORTD &= (1 << 3);
  - is the same as
  - PORTD &= 0b0001000;
  - which clears _____ but bit 3
- Use the '~' operator to complement the bits.
  - PORTD &= ~(1 << 3);
  - is the same as
  - PORTD &= 0b11110111;
  - and now 3 gets cleared.
- And _____ use a mask of all 0's
  - PORTD &= (0 << 3); // 0 shifted by any amount is 0 in all bit places

Setting/Clearing Multiple bits

- Can combine multiple bits into one defined value
  - PORTB |= ((1 << 3) | (1 << 4) | (1 << 5));
  - is the same as PORTB |= 0b00111000

  - PORTB &= ~ ((1 << 3) | (1 << 4) | (1 << 5));
  - is the same as PORTB &= 0b11000111;

```
1 << PB3     00001000
1 << PB4     00010000
1 << PB5   | 00100000
             --------
             00111000
```


DEBOUNCING SWITCHES

Counting Presses

- Consider trying to build a system that counted button presses on PC2 (increment once per button press)
- We can write code to check if the button is pressed (==0) and then increment 'cnt'
- But remember, your code executes extremely _____…what will happen?

```
#include <avr/io.h>
int main()
{
   PORTC |= (1 << PC2);
   int cnt = 0;
   while(1){
       char pressed = (PINC & 0x04);
       if( pressed == 0 ){
           cnt++;
       }
   }
   return 0;
}
```

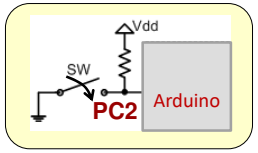

Waiting Through a Press

- Consider trying to build a system that counted button presses on PC2 (increment once per button press)
- We can write code to check if the button is pressed (==0) and then increment 'cnt'
- But remember, your code executes extremely fast…what will happen?

```
#include <avr/io.h>
int main()
{
   PORTC |= (1 << PC2);
   int cnt = 0;
   while(1){
      char pressed = (PINC & 0x04);
      if( pressed == 0 ){
         while( (PINC & 0x04) == 0 )
            {}
         cnt++;
      }
   }
   return 0;
}
```

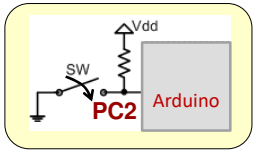

Interfacing Mechanical Switches/Buttons

- Mechanical switches and buttons do not make solid, steady contact immediately after being pressed/changed
- For a short (few ms) time, "_____" will ensue and can cause spurious SW operation (one press of a button may look like multiple presses)
- Need to "debounce" switches with your software
  - Usually waiting around _____ from the first detection of a press will get you past the bouncing and into the stable period

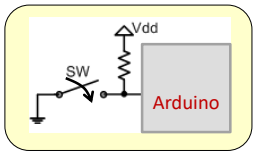

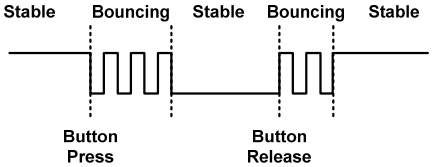

Waiting Through a Press

- Consider trying to build a system that counted button presses on PC2 (increment once per button press)
- We can write code to check if the button is pressed (==0) and then increment 'cnt'
- But remember, your code executes extremely fast…what will happen?

```
#include <avr/io.h>
int main()
{
   PORTC |= (1 << PC2);
   int cnt = 0;
   while(1){
      char pressed = (PINC & 0x04);
      if( pressed == 0 ){
         _delay_ms(5);
         while( (PINC & 0x04) == 0 )
           {}
         _delay_ms(5);
         cnt++;
      }
   }
   return 0;
}
```

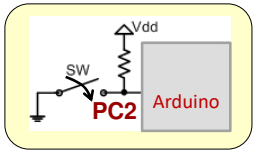

What's Your Function

- Because there is a fair amount of work to do just to recognize a button press, you may want to extract those to functions you can call over and over again

```
#include <avr/io.h>

char pc2Pressed()
{
 char pressed = (PINC & 0x04);
 if( pressed == 0 ){
   _delay_ms(5);
   while( (PINC & 0x04) == 0 ) { }
   _delay_ms(5);
   return 1;
 }
 else
   return 0;
}
int main()
{
   PORTC |= (1 << PC2);
   int cnt = 0;
   while(1){
     if( pc2Pressed() )
       cnt++;
   }
   return 0;
}
```


SUMMARY AND EXERCISES

Exercise 1

- **We want to use Group C (Port C) bit 5 as an output. Show how you should initialize your program then write a statement to turn the output 'ON' to 5V.**

Exercise 2

- **Now turn write a statement to turn that same output 'OFF' (i.e. to output 0V)**

Exercise 3

- **We want to use Group B (Port B) bit 3 as an input connected to a switch. You have no separate resistors available to you. Show how you should initialize your program and then write an if statement to check if the input voltage is HIGH (5V).**

Common Mistakes

- Don't make these mistakes
- Instead remember:
  - Never shift a 0 when trying to do an AND or OR (e.g. 0 << x)
  - Correctly parenthesize your comparisons
  - To check if a bit is 1, check if the result of the ANDing is not-equal to 0

```
// Clearing a bit to 0
// Wrong
PORTD &= (0 << 3);
PORTD |= (0 << 3);

// Right
PORTD &= ~(1 << 3);


// Checking a bit
// Wrong
if(PIND & (1 << 3) == 0)

// Right
if( (PIND & (1 << 3)) == 0)

// Checking if a bit is 1
// Wrong
if( (PIND & (1 << 3)) == 1)

// Right
if( (PIND & (1 << 3)) != 0)
```

Summary – Cheat Sheet

- Refer to the cheat sheet in your lecture notes
- Below are the methods to accomplish the 6 basic I/O tasks
  - Memorize these, practice these, recite these!!!

Set Pin as Output	`DDRB |= (1 << DDB4);`	**Set Pin as Input**	`DDRB &= ~(1 << DDB4);`
Set Output Value to 1	`PORTB |= (1 << PB4);`	**Check Pin is 1**	`(PINB & (1 << PB4)) != 0`
Clear Output Value to 0	`PORTB &= ~(1 << PB4);`	**Check Pin is 0**	`(PINB & (1 << PB4)) == 0`